This is a digital copy of a book that was preserved for generations on library shelves before it was carefully scanned by Google as part of a project to make the world's books discoverable online.

It has survived long enough for the copyright to expire and the book to enter the public domain. A public domain book is one that was never subject to copyright or whose legal copyright term has expired. Whether a book is in the public domain may vary country to country. Public domain books are our gateways to the past, representing a wealth of history, culture and knowledge that's often difficult to discover.

Marks, notations and other marginalia present in the original volume will appear in this file - a reminder of this book's long journey from the publisher to a library and finally to you.

**Usage guidelines**

Google is proud to partner with libraries to digitize public domain materials and make them widely accessible. Public domain books belong to the public and we are merely their custodians. Nevertheless, this work is expensive, so in order to keep providing this resource, we have taken steps to prevent abuse by commercial parties, including placing technical restrictions on automated querying.

We also ask that you:

+ *Make non-commercial use of the files* We designed Google Book Search for use by individuals, and we request that you use these files for personal, non-commercial purposes.
+ *Refrain from automated querying* Do not send automated queries of any sort to Google's system: If you are conducting research on machine translation, optical character recognition or other areas where access to a large amount of text is helpful, please contact us. We encourage the use of public domain materials for these purposes and may be able to help.
+ *Maintain attribution* The Google "watermark" you see on each file is essential for informing people about this project and helping them find additional materials through Google Book Search. Please do not remove it.
+ *Keep it legal* Whatever your use, remember that you are responsible for ensuring that what you are doing is legal. Do not assume that just because we believe a book is in the public domain for users in the United States, that the work is also in the public domain for users in other countries. Whether a book is still in copyright varies from country to country, and we can't offer guidance on whether any specific use of any specific book is allowed. Please do not assume that a book's appearance in Google Book Search means it can be used in any manner anywhere in the world. Copyright infringement liability can be quite severe.

**About Google Book Search**

Google's mission is to organize the world's information and to make it universally accessible and useful. Google Book Search helps readers discover the world's books while helping authors and publishers reach new audiences. You can search through the full text of this book on the web at `http://books.google.com/`

A 768,712

Digitized by Google

PROPERTY OF THE
University of Michigan Libraries
1817
ARTES SCIENTIA VERITAS

Digitized by Google

A.

RD:

worth, Broadway.

, Broadway, Stratford, Ess

Digitized by Google

Digitized by Google

# INSTITUTE OF MARINE ENGINEERS, London

FIRST VOLUME

OF

# TRANSACTIONS

COMPRISING

THE PAPERS PUBLISHED AND MEETINGS HELD

DURING

SESSION, 1889-90.

EDITED BY

JAS. ADAMSON

HONORARY SECRETARY.

Published Price:

ONE GUINEA.

STRATFORD:

Printed by Wilson and Whitworth, Broadway.

Published at the Langthorne Rooms, 15, Broadway, Stratford, Essex.

Digitized by Google

Digitized by Google

Engineering
Grant
1-19-28
16059

# INDEX.

1. ARTICLES OF ASSOCIATION, BY-LAWS, &c.
LIST OF MEMBERS AT 31st JANUARY, 1890.

2. STEERING GEAR—Paper by Mr. A. J. MAGINNIS (Member).

3. SHAFTING—Paper by Mr. G. W. MANUEL (Vice-President).

4. SCIENTIFIC TRI-UNITIES—Paper by Mr W. J. CRAIG (Vice-President).

5. RADIAL VALVE GEAR—Paper by Mr. R. BRUCE (Member).

6. BILGE PUMPS—Paper by Mr. F. W. WYMER (Vice-President).

7. FORCED DRAUGHT—Paper by Mr. JOS. WILLIAMS (Member).

8. PROGRESS OF THE MARINE ENGINE—
Paper by Mr. A. BELDAM (President).
REPORT OF FIRST GENERAL MEETING.

9. MARINE GOVERNORS—Paper by Mr. J. D. CHURCHILL (Member).

10. THE MARINE ENGINE CONSIDERED AS A MACHINE—
Paper by Mr. J. G. HAWTHORN (Member).
REPORT OF THE FIRST CONVERSAZIONE.

11. VENTILATION OF ENGINE-ROOMS AND STOKE-HOLDS—
Paper by Mr. A. SOMMERVILLE (Member).

12 ANNUAL REPORT AND CATALOGUES.

04-25-28 N.B.J.

Digitized by Google

Digitized by Google

THE

# INSTITUTE OF MARINE ENGINEERS,

THE LANGTHORNE ROOMS,

15, BROADWAY, STRATFORD, ESSEX.

---

# Memorandum

AND

# Articles of Association

AND

# By-Laws.

---

INCORPORATED 31ST JULY, 1889.

JOHN NEELY,

*Solicitor,*

25, OLD JEWRY, E.C.

---

PRICE ONE SHILLING.

---

STRATFORD:
Printed by Wilson and Whitworth, Broadway.
Published at the Langthorne Rooms, 15, Broadway, Stratford, Essex.

Digitized by Google

THE

# Institute of Marine Engineers.

## INDEX.


| | Page. |
|---|---|
| Certificate of Incorporation | 3 |
| Memoranda in connection with above | 4 |
| Memorandum of Association | 5 |
| Registered Office | 5 |
| Objects | 5 |
| Application of Income and property | 6 |
| Liability of Members | 6 |
| Subscribers—Names, Addresses, and Descriptions of | 7 |
| Articles of Association | 9 |
| Constitution | 9 |
| Members | 9 |
| Qualification of Members | 10 |
| Election | 10 |
| Associate Members, Associates, Graduates, and Honorary Members | 10 |
| Notice of and Voting at Meetings | 10 |
| Entrance Fees and Subscriptions | 10 |
| Expulsion | 11 |
| General Meetings | 12 |
| Proceedings at General Meetings | 13 |
| By-Laws | 14 |
| Council | 14 |
| Officers | 16 |
| Powers and Procedure of Council | 16 |
| Notices | 17 |
| Premises | 17 |
| Property of the Institute | 18 |
| Subscribers—Names, Addresses, and Descriptions of | 18 |
| By-Laws | 21 |
| Membership | 21 |
| Election of Members and Honorary Members, Associate Members, Associates, and Graduates | 22 |
| Transfer of Associate Members, Associates, and Graduates | 25 |
| Election of President, Vice-Presidents, and Members of Council | 27 |
| Officers of the Institute | 28 |
| Board of Advisers | 28 |
| Accounts | 28 |
| Finance | 29 |
| Visitors | 29 |
| Papers | 30 |
| Books, Drawings, &c. | 30 |
| Donations to the Institute | 30 |
| Meetings of Council | 30 |
| Servants of the Institute | 30 |
| Miscellaneous | 30 |
| List of Meetings | 32 |
| Names of Members &c. | 33 |
| Obituary | 41 |


Digitized by Google

*COPY.*

No. 29,475 C. N. L. 28,598.

# CERTIFICATE OF INCORPORATION

OF THE

## INSTITUTE OF MARINE ENGINEERS.

---

I hereby Certify that the Institute of Marine Engineers (the word "Limited" being omitted by License of the Board of Trade) is this day incorporated under the Companies' Acts 1862 to 1886, and that the Company is Limited.

Given under my hand, at London, this Thirty-first day of July, One Thousand Eight Hundred and Eighty-nine.

*Fees and Deed Stamps*, £8 5*s.* 0*d.*
*Stamp Duty on Capital*, £

ERNEST CLEAVE,

*Assistant Registrar of Joint Stock Companies.*

Digitized by Google

# MEMORANDA.

Every Company registered under the Companies' Act, 1862 (ss. 39—40), must, before carrying on business, file with the Registrar of Joint Stock Companies, Somerset House, a Notice of the situation of its Registered Office, and subsequently of any change therein.

Every Company having a Capital divided into Shares, must file annually with the Registrar, a Summary of its Capital, and List of its Members (ss. 26—27), made up to the 14th day after the first Ordinary General Meeting in each year, and to be registered within 7 days after such 14 days.*

Every Company formed under the Companies' Act, 1862, must hold a General Meeting within four months after its Memorandum of Association is registered (Co.'s Act, 1867, s. 39.) The first return of Capital and Members is to be made up to the 14th day after this meeting, and registered within 7 days of such 14th day.

A copy of every Special Resolution passed by a Company (ss. 51—52) must be printed and forwarded to the Registrar within 15 days from the date of the confirmation of the Resolution.

All Documents tendered for Registration must be signed by an authorised Officer of the Company (s. 64c), and must be according to the approved Forms, and bear an impressed Companies' Registration Fee Stamp of 5s., except in the case of an increase of Capital, when an *ad valorem* Stamp, in addition to the Registration Fee Stamp of 5s., must be impressed upon the prescribed Form for giving notice of such increase (s. 34).

Stamped Forms for the various Notices and Returns under the Companies' Act may be obtained at the Companies Registration Office, Somerset House. The charge is 5/2 for each stamped Form, except for a Memorandum of Association or a Notice of Increase, in which cases the Fee depends upon the nominal capital. Unstamped continuation Forms for Lists of Members are sold at one penny per form.

---

* The provision does not apply to a Company registered pursuant to s. 23 of the Companies' Act, 1857, and holding a License from the Board of Trade to dispense with the word "Limited" as part of its name.

Digitized by Google

# Memorandum of Association

OF THE

# INSTITUTE OF MARINE ENGINEERS.

1. The name of the Association is "THE INSTITUTE OF MARINE ENGINEERS."

2. The registered office of the Association will be situate in England.

3. The objects for which the Association is established are:—

(*a*) To promote the science and practice of Marine Engineering in all its branches.

(*b*) To enable Marine Engineers to meet and to correspond, to facilitate the interchange of ideas respecting the improvements in, and original and improved methods of working machinery, and the publication and communication of information on such subjects.

(*c*) To maintain and improve the status of Marine Engineers and the profession of Marine Engineering, to afford facilities for education, study and self-culture to Marine Engineers, and to promote their progressive advancement in knowledge of their profession.

(*d*) With a view to carrying out the objects aforesaid, to establish and carry on Institution premises and premises in connection with the Institution, and thereon to supply to members and persons entitled to attend meetings of the Association, and on complying with all conditions required by law, refreshments and accommodation of all kinds, to charge reasonable and proper sums for such refreshments and accommodation, and to enforce payment of such sums.

(*e*) Subject to the provisions of the 21st section of "The Companies Act, 1862," to acquire, borrow, lend, and dispose of property for the purposes aforesaid.

Digitized by Google

(*f*) To do all such other lawful things as are incidental or conducive to the attainment of the above objects, provided that the Institute shall not impose on its Members, or support with its funds any regulation the enforcing of which could not properly be an object of the Company registered under "The Companies Acts of 1862 and 1867."

4. The income and property of the Association, whencesoever derived, shall be applied solely towards the promotion of the objects of the Association as set forth in this Memorandum of Association, and no portion thereof shall be paid or transferred, directly or indirectly, by way of dividend, bonus, or otherwise howsoever, by way of profit to the Members of the Association, provided that nothing herein shall prevent the payment, in good faith, of remuneration to any officers or servants of the Association, or to any Member of the Association or other person, in return for any services actually rendered to the Association.

5. The fourth paragraph of this Memorandum is a condition on which a licence is granted by the Board of Trade to the Association in pursuance of Section 23 of "The Companies Act, 1867."

6. If any Member of the Association pays or receives any dividend, bonus or other profit, in contravention of the terms of the fourth paragraph of this Memorandum, his liability shall be unlimited.

7. Every Member of the Association undertakes to contribute to the assets of the Association in the event of the same being wound up during the time that he is a Member, or within one year afterwards, for payment of the debts and liabilities of the Association, contracted before the time at which he ceases to be a Member, and of the costs, charges, and expenses of winding up the same, and for the adjustment of the rights of the contributories amongst themselves, such amount as may be required not exceeding ten shillings, or in case of his liability becoming unlimited, such other amount as may be required in pursuance of the last preceding paragraph of this Memorandum.

8. If, upon the winding up or dissolution of the Association, there remains, after the satisfaction of all its debts and liabilities, any property whatsoever, the same shall not be paid to, or distributed among the Members of the Association, but shall be given or transferred to some other institution or institutions having objects similar to the objects of the Association, to be determined by the Members of the Association, at or before the time of

Digitized by Google

dissolution, or, in default thereof, by such Judge of the High Court of Justice as may have or acquire jurisdiction in the matter.

9. True Accounts shall be kept of the sums of money received and expended by the Association, and the matter in respect of which such receipt and expenditure takes place, and of the property, credits and liabilities of the Association, and, subject to any reasonable restrictions as to the time and manner of inspecting the same that may be imposed in accordance with the regulations of the Association for the time being, shall be open to the inspection of the Members. Once at least in every year the Accounts of the Association shall be examined and the correctness of the balance sheet ascertained by one or more properly qualified Auditor or Auditors.

WE, the several persons whose names and addresses are subscribed, are desirous of being formed into an Association in pursuance of this Memorandum of Association.

---

NAMES, ADDRESSES, AND DESCRIPTIONS OF SUBSCRIBERS.

ASPLAN BELDAM, Engineer, The Lodge, Acton.
JOHN MACFARLANE GRAY, Chief Examiner of Engineers, Board of Trade, 1, Claremont Road, Forest Gate.
GEORGE W. MANUEL, Superintendent Engineer, Eildon, Catford, Kent.
HENRY M. RAIT, Engineer, 1, Nester Terrace, N.W.
WILLIAM JEFFERS CRAIG, M. Insts. N.A. & C.E., Earlham Grove, Forest Gate.
JOHN H. THOMSON, Engineer, 26, Ethel Road, Victoria Docks.
ROBERT LESLIE, Engineer, Mayfield, Sprowston Road, Forest Gate.
J. W. DOMONEY, Merchant, Montrose, Balham Park Road, S.W.
JAS. ADAMSON, Engineer, St. Quivox, Stopford Road, Upton Manor.
L. P. COUBRO, Engineer, 13, Park Villas, Charlton Road, Blackheath.

---

Dated the 18th day of July, 1889.

Witness to the above signatures,

RICHD. BROWSE,
Clerk to JOHN NEELY,
Solicitor,
25, Old Jewry, London, E.C.

Digitized by Google

Digitized by Google

# Articles of Association

OF THE

# INSTITUTE OF MARINE ENGINEERS.

## CONSTRUCTION OF ARTICLES AND INTERPRETATION OF TERMS.

1. These Articles shall be construed with reference to the provisions of "The Companies Act, 1862," and "The Companies Act, 1867," and terms used in these Articles shall be taken as having the same respective meanings as they have when used in those Acts.

## OBJECTS OF INSTITUTE.

2. The Institute of Marine Engineers is established for the purposes expressed in the Memorandum of Association. It is hereinafter in these Articles referred to as "The Institute."

## CONSTITUTION.

3. The Institute shall be composed of Members, Associate Members, Associates, Graduates, and Honorary Members.

4. For the purpose of Registration, the number of Members, Associate Members, Associates, Graduates, and Honorary Members of the Institute is limited to five hundred.

## MEMBERS.

5. The subscribers of the Memorandum of Association, and such other persons as shall be elected as Members, in accordance with these Articles, and none others, shall be Members of the Institute, and be entered on the Register of the Institute as Members.

6. Any person may become a Member of the Institute who shall be qualified and elected as hereinafter mentioned, and shall

Digitized by Google

agree to become such member, and shall pay the entrance fee and first subscription accordingly.

7. The rights and privileges of every Member of the Institute shall be personal to himself, and shall not be transferable or transmissible by his own Act or by operation of law.

## QUALIFICATION OF MEMBERS.

8. The qualification of Members shall be prescribed by the By-laws of the Institute from time to time in force, as provided for by these Articles.

## ELECTION OF MEMBERS.

9. The election of Members shall be conducted as prescribed by the By-laws of the Institute from time to time in force, as provided for by these Articles.

## ASSOCIATE MEMBERS, ASSOCIATES, GRADUATES, AND HONORARY MEMBERS.

10. The Institute may admit such persons as may be hereafter qualified and elected in that behalf as Associate Members, Associates, Graduates, and Honorary Members, respectively, of the Institute, and may confer upon them such privileges as shall be prescribed by the By-laws of the Institute from time to time in force, as provided for by these Articles, provided always that no Associate Member, Associate, Graduate, or Honorary Member shall have any rights as a Member.

## NOTICE OF AND VOTING AT MEETINGS.

11. All Members, Honorary Members, Associate Members, Associates, and Graduates, shall have notice of, and the privilege to attend, all Meetings, but Members only shall be entitled to vote thereat.

## ENTRANCE FEES AND SUBSCRIPTIONS.

12. An entrance fee of £1 and an annual subscription of £1 1s. shall be paid by each member.

13 An entrance fee of £1 and an annual subscription of 15s. shall be paid by each Associate Member.

14. An entrance fee of 15s. and an annual subscription of 10s. shall be paid by each Associate.

15. An entrance fee of 10s. and an annual subscription of 5s. shall be paid by each Graduate.

Digitized by Google

16. All entrance fees shall be paid by candidates before their application for Membership can be entertained, such entrance fees to be returned to such candidates in the event of their not being elected. In the event of the candidate being elected to a class of Membership other than that for admission to which he has applied, the difference (if any) between the entrance fee paid by such candidate and the entrance fee payable for the class to which he is elected, as provided by these By-laws, shall be re-paid to such candidate, or paid by such candidate, as the case may be. *All subscriptions shall be payable in advance, and shall become due on the first day of January in each year. The subscriptions of all Members, Associate Members, Associates, and Graduates, shall commence on the first day of January in the year in which he is elected, if such election shall take place on or before the thirtieth day of September in that year; but if such election shall take place after the thirtieth day of September in such year, then the subscription of such Member, Associate Member, Associate or Graduate, shall commence from the first day of January next following such election.*

17. The annual subscription of Members may be compounded for by the payment of ten pounds ten shillings, such payment to confer the privileges of Membership for life.

18. If any Member, Associate Member, Associate, or Graduate, shall allow his subscription to fall six calendar months in arrear, the Treasurer shall write to inform him of the same, and if he does not pay such subscription within the space of six calendar months from the date of this communication, the Council shall have power to cancel his Membership as Member, Associate Member, Associate, or Graduate, as the case may be. In no case shall any Member be allowed to vote at any Meeting unless he has paid in full all arrears of subscriptions, and his subscription in full for the year in which such Meeting is held.

## EXPULSION.

19. If any Member, Associate Member, Associate, or Graduate shall leave his subscriptions in arrear for two years, and shall fail to pay such arrears within four calendar months after a written application has been sent to him by the Secretary, his name may be struck off the list of Members, Associate Members, Associates, or Graduates, as the case may be, by the Council, at any time afterwards, and he shall thereupon cease to have any rights as a Member, Associate Member, Associate, or Graduate, as the

* Amended to :—" All Subscriptions are due on the Anniversary of Election."

Digitized by Google

case may be, but he shall nevertheless continue liable to pay the arrears of subscriptions due at the time of his name being so struck off, provided always that this regulation shall not be construed to compel the Council to remove any name if they shall be satisfied the same ought to be retained.

20. The Council may refuse to continue to receive the subscriptions of any person who shall have wilfully acted in contravention of the regulations of the Institute, or who shall, in the opinion of the Council have been guilty of such conduct as shall have rendered him unfit to continue to belong to the Institute, and may remove the name of any such person from the list of Members, Associate Members, Associates, Graduates, or Honorary Members (as the case may be), and such person shall cease to be a Member, Associate Member, Graduate, or Honorary Member (as the case may be) of the Institute, but such person shall be at liberty to appeal to a General Meeting of the Association to rescind such removal, and such Meeting shall have power to do so.

## GENERAL MEETINGS.

21. *The first General Meeting shall be held at such time (not being more than four months after the registration of the Memorandum of Association of the Institute), and at such place as the Council may direct.

22. Subsequent General Meetings shall be held at such time and place as may be prescribed by the Council, but one General Meeting shall be held during the first three months of every year, and shall be called the Annual General Meeting.

23. Subject to the discretion given to the Council by Articles 21 and 22, four General Meetings shall be held in every year, and subject as aforesaid, such meetings shall be held at the Langthorne Rooms, Stratford Broadway, Stratford, in the County of Essex, the Institute premises, and shall be respectively held on the first Friday in March, the first Friday in June, the first Friday in September, and the first Friday in December of every year. The Meeting held on the first Friday in March, or other the first General Meeting, prescribed by the Council under Article 21, shall be called the Annual General Meeting. All others of the above-mentioned General Meetings shall be called Ordinary General Meetings.

24. All other Meetings of the Institute shall be called Extraordinary General Meetings.

---

* Held in the Langthorne Rooms, 15, Broadway, Stratford, on Friday evening, November 1st, 1889.

Digitized by Google

25. An Extraordinary General Meeting may be convened at any time by the Council, and shall be convened by them whenever a requisition, signed by twenty Members of the Institute, specifying the object of the meeting, is left with the Secretary. If for fourteen days after the delivery of such requisition a meeting be not convened in accordance therewith, the requisitioners, or any twenty Members of the Institute, may convene an Extraordinary General Meeting in accordance with the requisition. All General Meetings shall be held within a radius of ten miles from the General Post Office, in the City of London.

26. No notice of any General Meeting held at the place and time mentioned in Article 17 shall be given, but seven clear days' notice of every other General Meeting, specifying generally the nature of any special business to be transacted at such meeting, shall be given to every Member of the Institute, and no other special business shall be transacted at such meeting; but the non-receipt of such notice by any Member or Members shall not invalidate the proceedings of such meeting. No notice of the business to be transacted (other than such ballot lists as may be requisite in case of elections) shall be required in the absence of special business.

27. Special business shall include all business for transaction at an Extraordinary General Meeting, and all business for transaction at every other meeting, with the exception of the reading and confirmation of the Minutes of the previous meeting, and the reading and discussion of papers as provided by the By-laws or any regulations of the Council made in accordance with the By-laws.

## PROCEEDINGS AT GENERAL MEETINGS.

28. Fifteen Members shall constitute a quorum for the purpose of a General Meeting other than an Extraordinary General Meeting. Twenty members shall constitute a quorum for the purposes of an Extraordinary General Meeting.

29. If within twenty minutes after the time fixed for holding the meeting a quorum is not present, the meeting shall be dissolved, and all matters which might, if a quorum had been present, have been done at a meeting (other than an Extraordinary General Meeting) so dissolved may forthwith be done on behalf of the Meeting by the Council.

30. The President shall be the Chairman at every meeting, and in his absence one of the Vice-Presidents, and in the absence of all Vice-Presidents, a Member of Council shall be elected by

Digitized by Google

the Members present to the Chair, and if no Member of Council be present and willing to take the Chair, the Members present at the meeting shall elect a Chairman from among themselves.

31. The decision of a General Meeting shall be ascertained by show of hands, unless after the show of hands a poll is forthwith demanded, and by a poll when a poll is thus demanded. The manner of taking a show of hands or a poll shall be in the discretion of the Chairman, and an entry in the Minutes, signed by the Chairman, shall be sufficient evidence of the decision of the General Meeting. Each Member shall have one vote, and no more. In case of equality of votes the Chairman shall have a second or casting vote. Provided that this Article shall not interfere with provisions of the By-laws as to election by Ballot.

32. The acceptance or rejection of votes by the Chairman shall be conclusive for the purpose of the decision of the matter in respect of which the votes are tendered. Provided that the Chairman may review his decision at the same meeting if any error be then pointed out to him.

## BY-LAWS.

33. The By-laws set forth in the Schedule to these Articles, and such altered and additional By-laws as shall be added or substituted as hereinafter mentioned shall regulate all matters by the Articles left to be prescribed by the By-laws, and which may lawfully be settled by By-laws, and all matters which, consistently with the Articles and Statutes, shall be made the subject of By-laws. Alterations in and additions to the By-laws may be made only by resolution of the Members at an Annual General Meeting.

## COUNCIL.

34. The Council of the Institute shall consist of one President, not more than thirty Vice-Presidents, the Honorary Secretary and Honorary Treasurer (if any), and thirteen ordinary Members of Council.

The first Council shall be as follows:—

PRESIDENT.

Asplan Beldam.

VICE-PRESIDENTS.

William Jeffers Craig.

Thomas Wilson Fish.

Digitized by Google

VICE-PRESIDENTS—*Continued.*

John Macfarlane Gray.
G. W. Manuel.
Henry Prior.
Alexander Winton Robertson.
Henry Milnes Rait.
John Henderson Thomson.
Archibald Thomson.
John Tait.
James Weir.
F. W. Wymer.

HONORARY SECRETARY.

James Adamson.

HONORARY TREASURER.

James William Domoney.

COUNCIL.

Lewis Potter Coubro.
David Greer.
Andrew Gibb.
James George Hawthorn.
Robert Leslie.
William Percy Laing.
Daniel Macmillan.
Arthur John Maginnis.
Matthew Prior.
John Ruthven Ruthven.
Frederick William Shorey.
James Stewart.
William M. Taylor.

35. The first Council shall continue in office until the Annual General Meeting in 1890. The President, Vice-Presidents and eight Members of the Council shall retire at each succeeding Annual General Meeting, but shall be eligible for re-election. The Members of Council to retire each year shall be chosen from those

Digitized by Google

who have been longest in office, and in cases of equal seniority shall be determined by the Council by Ballot.

36. The election of a President, Vice-Presidents, and Members of the Council, to supply the places of those retiring at the Annual General Meeting, shall be conducted in such manner as shall be prescribed by the By-laws from time to time in force as provided for by these Articles.

37. The Council may supply any casual vacancy in the Council (including any casual vacancy in the office of President) which shall occur between one Annual General Meeting and another, and the President or Members of the Council so appointed shall retire at the succeeding Annual General Meeting. The Members of the Council so retiring shall be in addition to the Members retiring under Article 35. Vacancies not filled up at the Annual General Meeting shall be deemed to be casual vacancies within the meaning of this Article.

## OFFICERS.

38. The Treasurer, Secretary, or Assistant Secretary or Secretaries, whether honorary or paid, and all the employés of the Institute shall be appointed and removed in the manner prescribed by the By-laws or regulations of the Institute from time to time in force. Subject to the express provisions of the By-laws, the officers and servants of the Institute shall be appointed and removed by the Council.

39. The powers and duties of the officers of the Institute shall (subject to any express provisions in the By-laws) be determined by the Council.

## POWERS AND PROCEDURE OF COUNCIL.

40. The Council may regulate their own procedure, and delegate any of their powers and discretions to any one or more of their body, and may determine their own quorum if no other number is prescribed. Three Members of the Council shall form a quorum.

41. The Treasurer may, with the consent of the Council, invest in the name of the Institute, any moneys not immediately required for the purposes of the Institute in or upon any of the following investments, that is to say:—

(*a*) The Public Funds or Government Stocks of the United Kingdom, or of any Foreign or Colonial Government, guaranteed by the Government of the United Kingdom.

Digitized by Google

(*b*) Real or leasehold securities, or in the purchase of real or leasehold properties in Great Britain.

(*c*) The security of rates levied by any corporate body empowered to borrow money on the security of rates, where such borrowing has been duly authorised by Act of Parliament.

42. The Council may, with the authority of a resolution of the Members in General Meeting, borrow moneys for the purposes of the Institute, on the security of the property of the Institute.

43. No act done by the Council, whether *ultra vires* or not, which shall receive the express or implied sanction of the Members of the Institute in General Meeting, shall be afterwards impeached by any Member of the Institute on any ground whatsoever, but shall be deemed to be an act of the Institute.

## NOTICES.

44. A notice may be served by the Council of the Institute upon any Member, Associate Member, Associate, Graduate or Honorary Member, either personally or by sending it through the post in a prepaid letter, addressed to such Member, Honorary Member, Associate Member, Associate, or Graduate, at his registered place of abode.

45. Any notice, if served by post, shall be deemed to have been served at the time when the letter containing the same would be delivered in the ordinary course of the post, and in proving such service it shall be sufficient to prove that the letter containing the Notice was properly addressed and put into the Post Office.

46. No Member, Honorary Member, Associate Member, Associate, or Graduate, not having a registered address within the United Kingdom, shall be entitled to any notice, and all proceedings may be had and taken without notice of such Member, Honorary Member, Associate Member, Associate, or Graduate (as the case may be) in the same manner as if he had had due notice.

## PREMISES OF THE INSTITUTE.

47. The rights and restrictions of Members, Honorary Members, Associate Members, Associates, and Graduates, in the usage of the premises of the Institute, shall, so far as lawful, be prescribed by the By-laws or by the regulations of the Institute from time to time in force, as provided for by these Articles.

Digitized by Google

## PROPERTY OF THE INSTITUTE.

48. The rights and restrictions of Members, Honorary Members, Associate Members, Associates and Graduates in the usage of the property of the Institute, shall, so far as lawful, be prescribed by the By-laws or by the regulations from time in force, as provided for by these Articles.

---

### Names, Addresses and Descriptions of Subscribers.

Asplan Beldam, Engineer, The Lodge, Acton.

John Macfarlane Gray, Chief Examiner of Engineers, Board of Trade, 1, Claremont Road, Forest Gate.

George W. Manuel, Superintendent Engineer, Eilden, Catford, Kent.

H. M. Rait, Engineer, 1, Nester Terrace, N.W.

William Jeffers Craig, M. Insts. N.A. & C.E., Earlham Grove, Forest Gate.

John H. Thomson, Engineer, 26, Ethel Road, Victoria Docks.

Robert Leslie, Engineer, Mayfield, Sprowston Road, Forest Gate.

J. W. Domoney, Merchant, Montrose, Balham Park Road, S.W.

Jas. Adamson, Engineer, St. Quivox, Stopford Road, Upton Manor.

L. P. Coubro, Engineer, 13, Park Villas, Charlton Road, Blackheath.

Dated this 18th day of July, 1889.

Witness to the above signatures,

RICHD. BROWSE,
Clerk to John Neely,
Solicitor,
25, Old Jewry, London, E.C.

Digitized by Google

# BY-LAWS.

Digitized by Google

Digitized by Google

# By-Laws

OF THE

# INSTITUTE OF MARINE ENGINEERS.

## MEMBERSHIP.

1. Candidates for admission as members must be Engineers possessing First-class Board of Trade Certificates, and who have, in addition, occupied the position of Chief or Second Engineer during a period of not less than twelve calendar months prior to the date of their application for Membership, or in the alternative they must be Engineers in virtue of their education and experience, who occupy, or have occupied, responsible positions on shore in the designing or construction of machinery in connection with Marine Engineering, or in the directing or carrying on of work connected with Marine Engineering.

2. Candidates for admission as Associate Members must be Engineers possessing Second-class Board of Trade Certificates, and who have, in addition, had charge of a watch at sea during a period of not less than eighteen calendar months prior to the date of their application for Membership, or in the alternative they must be Engineers in virtue of their education and experience, who occupy, or have occupied, some semi-responsible position on shore, in the designing or construction of machinery in connection with Marine Engineering, or in the directing or carrying on of work connected with Marine Engineering.

3. Candidates for admission as Associates must be gentlemen not under the age of twenty-one years, who, by virtue of their education and experience are Engineers,and who follow, or propose to follow, the occupation of Marine Engineers, or an occupation connected with Marine Engineering.

Digitized by Google

4. Candidates for admission as Graduates must be Apprentices to the science, profession, trade, or business of Engineering, who have served as such Apprentices during a period of not less than three years prior to their application for membership, and who propose to follow the occupation of Marine Engineers, or an occupation connected with Marine Engineering work.

5. Any Graduate may be afterwards admitted as an Associate, Associate Member or Member (as the case may be), any Associate as an Associate Member or Member (as the case may be), and any Associate Member as a Member, at the discretion of the Council, on his becoming possessed of the necessary qualifications.

6. The Council shall have power to elect as Honorary Members, Peers, Members of Parliament, persons holding high civic or other distinguished positions, or influential persons connected with or interested in Engineering, subject to such regulations as the Council shall, from time to time, decide. Such Candidates shall be entitled to be ballotted for immediately.

## ELECTION OF MEMBERS, HONORARY MEMBERS, ASSOCIATE MEMBERS, ASSOCIATES, AND GRADUATES.

7. Every Candidate for admission as Member must, unless and until the Council shall prescribe some other form of application for membership, sign the following form of application for membership :—

"I, the undersigned, desire to become a member of the "Institute of Marine Engineers, and I do hereby promise "and agree that in the event of my election, I will be "governed by the Memorandum and Articles of Association "of the Institute, and that I will abide by and conform to "the By-laws and Regulations of the said Institute as such "Articles, By-laws, and Regulations are now formed, or as "they may hereafter be altered, amended, or enlarged, and "I promise to promote the objects of the said Institute as "far as shall be in my power, and to attend the meetings "thereof as often as I conveniently can, provided that "whenever I shall signify in writing to the Secretary that "I am desirous of withdrawing my name therefrom, I "shall (after payment of any arrears which may be due "from me at that period) be free from this obligation.

"I also promise and agree to present to the Institute "an original paper, drawing, plan or model of interest to

Digitized by Google

"Marine Engineers, or some scientific work for the library, "within the space of twelve calendar months from the date "of my election. My qualification for admission as "Member of the Institute is [Here state the qualification.] "

Signature of Applicant

Address

Present Occupation

Age (if Applicant for admission as Associate)

Apprenticeship served with

No. and Grade of Board of Trade Certificate

Date of Application

Proposed by

Signature of Proposer

Address of Proposer

Seconded by

Signature of Seconder

Address of Seconder

8. Every Candidate for admission as an Associate Member, Associate or Graduate must, unless or until the Council shall prescribe some other form of application for admission, sign the following form of application for admission :—

"I, the undersigned, desire to become a "of the Institute of Marine Engineers, and I do hereby "promise and agree that I will be governed by the Memor- "andum and Articles of Association of the Institute, and "that I will abide by and conform to the By-laws and "Regulations of the said Institute as such Articles, By-laws "and Regulations are now formed, or as they may hereafter "be altered, amended or enlarged; and I promise to pro- "mote the objects of the said Institute as far as shall be in "my power, and to attend the meetings thereof as often as "I conveniently can. Provided that, when ever I shall "signify in writing to the Secretary that I am desirous of "withdrawing my name therefrom, I shall (after payment "of any arrears which may be due from me at that period)

Digitized by Google

"be free from this obligation. My qualification for ad-
"mission as of the Institute of Marine
"Engineers is [Here state the qualification] "

Signature of Applicant
Address
Present Occupation
Apprenticeship served with
No. and Grade of Board of Trade Certificate
Date of Application
Proposed by
Signature of Proposer
Address of Proposer
Seconded by
Signature of Seconder
Address of Seconder

9. Every Candidate must be proposed by one Member, and seconded by at least one other Member, to one of whom he must be personally known. The Candidate's name, residence, place of business (if any), the name of the firm to which he belongs (if any), the class under which he desires to join, his qualification to join such class, and his age if he be a Candidate for admission as Associate, shall be inserted in the application form in the place provided for such purpose. The application form shall be signed by the proposer and seconder. If, by reason of the absence, illness or otherwise of the proposer or seconder, it shall be necessary, the Secretary may, on the written request of such proposer or seconder, sign the application form on behalf of such proposer or seconder. All application forms shall be sent or handed to the Secretary, and all Candidates shall be nominated at the next Council Meeting following the receipt of the application form by the Secretary, and put up for election at the next Council Meeting following the Council Meeting at which they are nominated, provided the seven days mentioned in clause 20 has elapsed, and if such seven days have not elapsed, at the next Council Meeting after the expiration of such seven days.

10. The election of all Candidates shall be by ballot, and no Candidate shall be elected unless he shall obtain more than four affirmative votes to one negative vote.

11. The election of Candidates shall be vested solely in the

Digitized by Google

Council, six of whom shall form a quorum at such election.

12. A list of Candidates, with the names of their proposers and seconders, dated and signed by the Secretary or some other person appointed by the Council, shall be put up in the entrance hall or one of the rooms of the Institute, to be selected and appointed by the Council at least seven days before the election.

13. In case of non-election no mention thereof shall be made in the minutes, nor shall any notice be given to the unsuccessful Candidate except that any entrance fee he has paid shall be returned.

14. Any person duly elected a Member, Associate Member, Associate, or Graduate, shall be informed thereof without delay by a letter from the Secretary, and he must thereupon pay his annual subscription for the current or succeeding year, as the case may be, in accordance with these By-laws, within four calendar months from his election, which election shall otherwise become void. The Council, may, however, in their discretion extend the time if they think fit so to do.

15. Every Member, Associate Member, Associate, or Graduate, elected, having signed the register of the Institute, and having made all the proper payments, shall be entitled to a certificate of his election, which certificate shall specify the class to which he belongs.

16. Every Member shall, within twelve calendar months from the date of his election, present to the Institute an original paper, drawing, plan, or model of interest to Marine Engineers, or some scientific work for the library of the Institute. The Council shall, however, have power to extend the above-mentioned time of twelve calendar months, if they in their discretion shall think fit so to do.

## TRANSFER OF ASSOCIATE MEMBERS, ASSOCIATES, AND GRADUATES.

17. If any Graduate shall possess the necessary qualifications for admission as Associate, Associate Member, or Member, or if any Associate shall possess the necessary qualifications for admission as Associate Member, it shall be competent for such Graduate, Associate, or Associate Member (as the case may be) to apply to the Council for a transfer to the class of Associates, Associate Members, or Members (as the case may be).

Digitized by Google

18. Such application shall be made in the following form :—

"I, the undersigned, desire to be transformed from
"the class of to the class
"of
"My qualifications for admission to the class of
" are [Here
"state the qualifications]

19. If the request for transfer is to the class of Members, the Candidate shall, in addition to the above form of request, add the following :—

"In the event of my being transferred to the class
"of Members, I undertake, within the space of twelve
"calendar months next after such transfer, to present to
"the Institute an original paper, drawing, plan, or
"model of interest to Marine Engineers, or some
"scientific work for the Library.

20. The request for transfer shall be signed by two Members, who shall certify to the Council that to the best of their knowledge, information, and belief, the Candidate for transfer is a fit and proper person for admission to the class to which he desires to be transferred, and that his qualifications for such admission are, to the best of their knowledge, information, and belief, truly stated by the Candidate in the request for transfer.

21. Any Candidate for transfer who shall be duly transferred by the Council from any one class to any other class, shall be informed of such transfer without delay by the Secretary, and such transferred Candidate must pay the increase in entrance fee (if any) and annual subscription between the class from which he is transferred and the class to which he is transferred, within the space of four calendar months from his transfer, which otherwise shall become void, but the Council may extend the time for such payment if they, in their discretion, shall think fit so to do.

22. Every Graduate, Associate, or Associate Member transferred to the class of Members, shall, within twelve calendar months from the date of his transfer, present to the Institute an original paper, drawing, plan, or model of interest to Marine Engineers, or some scientific work for the Library of the Institute. The Council may, however, extend the above-mentioned time of twelve calendar months if they, in their discretion, shall think fit so to do.

23. Every person transferred from one class to another having paid the additional entrance fee and subscription in accordance with these By-laws, and having signed the register of the class to

Digitized by Google

which he has been transferred, shall be entitled to a certificate showing the class to which he belongs.

24. At the first Ordinary Meeting at which any transferred Member is present, he having fulfilled the foregoing requirements, and having requested the President or Chairman of the meeting so to do, the President or Chairman of the meeting shall, addressing him by name, introduce him to the meeting, naming his new classification.

## ELECTION OF PRESIDENT, VICE-PRESIDENTS, AND MEMBERS OF COUNCIL.

25. A ballot paper for the succeeding year of office, containing the names of a proposed President, Honorary Secretary and Honorary Treasurer, and a number of ordinary Members of Council equal to the number of ordinary Members of Council who are the retiring Members, in accordance with the Articles of Association, shall be issued to every Member who has a registered address within the United Kingdom, and who is entitled to vote three calendar months at least before the Annual General Meeting. Any Member who is entitled to vote may substitute the name of any other Member or Honorary Member for the name of the Member or Honorary Member nominated in the ballot paper (as such ballot paper is received by the Member) as President, the name of any Member for the name of the Member nominated as Honorary Secretary (if any), the name of any Member for the name of the Member nominated as Honorary Treasurer (if any), and the name or names of any one or more Members for one or more of those nominated as Ordinary Members of Council, provided that the total number of names on the ballot list as received by the Member must not be increased or added to.

26. The Members present at the Annual General Meeting shall elect by show of hands two scrutineers, and the decision of such scrutineers as to the reception or otherwise of any ballot paper is to be final.

27. Any ballot paper which contains more than one President, one Honorary Secretary (if any), one Honorary Treasurer (if any), and a number of Ordinary Members of Council, equal to the number on the ballot paper as issued to the Members, shall be void. Every Member wishing to vote shall personally hand his ballot paper to the Secretary, or shall leave such ballot paper at the premises of the Institute, addressed to the Secretary, or shall send such ballot paper by prepaid letter, addressed to the Secretary, four clear days at least before the date of the Annual General Meeting.

Digitized by Google

Provided always that no election shall be invalidated or otherwise affected by any ballot paper so sent or left not reaching the hands of the Secretary, or by any ballot paper not having been sent to or received by any Member.

28. The election of the Vice-Presidents shall be invested solely in the President, Honorary Secretary, and Honorary Treasurer (if any), and Ordinary Members of the Council, who, after their own election, shall elect the Vice-Presidents for their own year of office.

## OFFICERS OF THE INSTITUTE.

29. The Members may at the Annual General Meeting elect an Honorary Secretary and an Honorary Treasurer for the succeeding year. The Council may appoint and pay an Assistant Secretary and define his duties, and, at their discretion, may dismiss such Assistant Secretary.

30. All other Officers and Servants of the Institute shall be appointed by the Council, who will define their duties and may dismiss them.

31. Any act which by these By-laws is directed to be done by the Secretary, or any other named Officer of the Institute, may be done by any person duly authorised in such behalf by a resolution of the Council.

32. If a vacancy in the post of Honorary Secretary or Honorary Treasurer shall occur between any two Annual General Meetings, the Council may fill up such vacancy.

## BOARD OF ADVISERS.

33. There shall be a Board of Advisers, numbering twelve, elected annually by the Council at the first Council Meeting after the Annual General Meeting.

34. The Board of Advisers shall be elected from the Council and the Honorary Members of the Institute.

35. The Board of Advisers shall elect their own Secretary, and their duties will be to consider and give recommendation to the Council on such matters as may be remitted to them by the Council.

## ACCOUNTS.

36. An Auditor or Auditors shall be appointed by the Members at the Annual General Meeting to examine and audit the accounts of the current year, and report thereon at the next Annual Meeting.

Digitized by Google

37. The Council shall fill up any vacancy that shall occur in the post of Auditor through resignation or otherwise.

38. An abstract of the accounts shall be made for the use of Members, and any Member may obtain a copy by applying to the Secretary for such copy within fourteen days immediately preceding the date of the Annual General Meeting.

## FINANCE.

39. The financial affairs of the Institute shall be managed by the Council, who shall, if they think fit, elect from among themselves a Finance Committee of four in addition to the Treasurer, who shall be *ex-officio* a Member of the Finance Committee.

40. The Current Account of the Institute shall consist of two-thirds of all moneys received as entrance fees and subscriptions from Members, Associate Members, Associates and Graduates. The Capital Account shall consist of the remaining one-third of all entrance fees and subscriptions received from Members, Associate Members, Associates and Graduates, and of all subscriptions and donations received from Honorary Members.

41. The funds of the Institute shall be so managed that at no time shall the liabilites of the Institute exceed the balance of the Current Account of the Institute, except by special authorisation of the Council at a meeting especially called for that purpose.

42. No liability shall be incurred for any greater sum than £5, and no moneys belonging to the Institute expended exceeding in amount the sum of £5, without the authorisation of the Council.

## VISITORS.

43. Any Member, Honorary Member, Associate Member, Associate, or Graduate, shall be at liberty to introduce visitors to the Institute, subject to such regulations as the Council may from time to time deem necessary. This shall include the right to introduce one friend as a visitor to any of the meetings of the Institute; but such visitors shall withdraw during the transaction of any business in connection with the management, if any Member desire that they shall so withdraw. The charges incurred by visitors shall in every case be defrayed by the Member, Honorary Member, Associate Member, Associate, or Graduate (as the case may be) introducing them. The names of all such visitors shall be entered in a book to be kept for that purpose.

44. It shall be in the discretion of the Council to admit any Candidate for admission as Member, Associate Member, Associate

Digitized by Google

or Graduate, pending his election, to all the privileges of Membership, except voting.

## PAPERS.

45. All papers proposed to be read shall be first submitted to the Council for their approval.

## BOOKS, DRAWINGS, &c.

46. None of the property of the Institute, such as books, drawings, &c., shall be taken out of the premises without the consent of the Council.

## DONATIONS TO THE INSTITUTE.

47. All donations to the Institute shall be enumerated in the Annual Report of the Council reported to the Annual General Meeting.

## MEETINGS OF COUNCIL.

48. No business involving the expenditure of the funds of the Institute (except by way of payment of current salaries and accounts) shall be transacted at any Council Meeting, unless specified in the notice convening the meeting.

49. A prepaid letter giving notice of every Council Meeting shall be sent to each Member of the Council, by posting the same seven clear days at least prior to such Council Meeting, addressed to the registered address of such Member, provided that nothing done at any Council Meeting shall be nullified or affected by reason of notice not having been sent to or received by any Member.

## SERVANTS OF THE INSTITUTE.

50. No Member, Honorary Member, Associate Member, Associate, or Graduate shall give any money or gratuity to any servants of the Institute upon any pretence whatever.

51. All complants respecting the servants, the charges or domestic arrangements of the Institute shall be addressed in writing to the Secretary.

## MISCELLANEOUS.

52. No provisions cooked in the Institute, or wines or other liquors, are to be sent out from the Institute premises on any pretence whatever.

Digitized by Google

53. No game of hazard shall be played, nor shall dice be used on the Institute premises except for backgammon.

54. The premises of the Institute shall open and close at such hours as the Council shall from time to time appoint.

55. All Members, Honorary Members, Associate Members, Associates, and Graduates, are to pay for every expense incurred on the premises of the Institute before they leave.

56. No dogs are to be brought on the premises of the Institute.

57. No smoking shall be allowed on the premises of the Institute, except in those rooms set apart by the Council for that purpose.

Digitized by Google

# LIST OF MEETINGS.

*FROM JANUARY*, 1889, *TO JANUARY*, 1890.

---

1889.

| | |
|---|---|
| *February* 12*th* | Preliminary Meeting. |
| *April* 5*th* | Paper by MR. A. J. MAGINNIS. |
| *May* 14*th* | Paper by MR. J. MC F. GRAY. (Not Published.) |
| *May* 27*th* | Paper by MR. G. W. MANUEL. |
| *June* 6*th* | Discussion continued. |
| *September* 2*nd* | Paper by MR. W. J. CRAIG. |
| *September* 24*th* | Paper by MR. R. BRUCE. |
| *September* 27*th* | Discussion continued. |
| *October* 11*th* | Paper by MR. F. W. WYMER. |
| *October* 19*th* | Paper by MR. JOS. WILLIAMS. |
| *November* 1*st* | General Business Meeting. |
| *November* 1*st* | Paper by MR. A. BELDAM. |
| *November* 18*th* | Paper by MR. J. D. CHURCHILL. |
| *December* 6*th* | Conversazione. |

1890.

| | |
|---|---|
| *January* 13*th* | Paper by MR. J. G. HAWTHORN. |
| *January* 31*st* | Paper by MR. A. SOMMERVILLE. |

Digitized by Google

# INSTITUTE OF MARINE ENGINEERS

FOUNDED FEBRUARY, 1889. INCORPORATED JULY, 1889.

## LIST OF MEMBERS.

JANUARY, 1890.

| | |
|---|---|
| Adamson, J. | St. Quivox, Stopford Road, Upton Manor, E. |
| Adam, R. | 6, Tomlins Grove, Bow. |
| Allison, A. C. | 80, Avenue Road, Acton, W. |
| Anderson, T. | 25, Stopford Road, Upton Manor. |
| Baker, W. H. | 3, Claremont Road, Forest Gate. |
| Barclay, W. | 13, Cadogan Terrace, Salisbury Road, Forest Gate, E. |
| Barringer, H. | Melrose, Cambine Park, Wanstead. |
| Beldam, A. | The Lodge, Acton, W. |
| Blair, Arch. | 16, Liverpool Road, Canning Town, E. |
| Boaz, W. | 29, West India Dock Road, Poplar, E. |
| Boyd, P. | 17, Ranelagh Terrace, Leytonstone, E. |
| Brown, A. B. | Rosebank Iron Works, Edinburgh. |
| Brown, L. | 8, Back St., Renton, Dumbarton. |
| Brown, W. J. | 3A, St. Stephen's Road, Bow, E. |
| Bruce, John | 4, Clutha Street, Paisley Road, Glasgow. |
| Bruce, Robert | 47, Burgoyne Road, Harringay, N. |
| Brydon, J. M. | 18, Cadogan Terrace, Victoria Park, N.E. |
| Buchanan, W. C. | 74, Finnart Street, Greenock. |
| Buckley, W. | Springleigh House, Sharrow, Sheffield. |
| Cambridge, Henry | Mount Stuart Square, Cardiff. |
| Campbell, R. | Hillview Cottage, Boghead, Dumbarton, N.B. |
| Campbell, Arch. | Fern Villa, Chaucer Road. |

Digitized by Google

LIST OF MEMBERS—*Continued.*

| | |
|---|---|
| Campbell, Alex. | 8, Albert Terrace, Etherley Road, West Green, N. |
| Campbell, Thos. | 17, Monnow Road, Bermondsey. |
| Carrick, S. | Shaw, Saville and Albion Co., R. Albert Dock. |
| Chisholm, H. | 543, Barking Road, E. |
| Churchill, J. D. | 23, Leadenhall Street, E.C. |
| Cleghorn, Geo. | Clifton Villa, Chaucer Road. |
| Cooper, F. | 37, Fifth Avenue, Queen's Park, W. |
| Cotton, W. J. | 343, Holloway Road, N. |
| Coubro', L. P. | 13, Park Villas, Charlton Road, Blackheath, Kent. |
| Cowan, Jas. | 2, Station Street, Stranraer, N.B. |
| Craig, W. J. | Pendower. Earlham Grove. |
| Croll, Geo. | 4, John Street, Paisley. |
| Crichton, A. G. | 67, Belmont Terrace, Romford Road. |
| Crook, C. A. | 60, Piggot Street, Limehouse, E. |
| Dagleish, J. | 80, Neptune Street, Wallsend. |
| Daniels, Arch. | Coppermill Lane, Walthamstow. |
| Davison, J. | Rosedale, Wallwood Road, Leytonstone, E. |
| Deighton, Thos. | 18, Clements Road, Southwark Park. |
| Denny, P., junr, | Bellfield, Dumbarton, N.B. |
| Dibb, J. | Lynwood, Francis Road, Leyton, E. |
| Dimmock, J. W. | 263A, Romford Road, Forest Gate, E. |
| Douglas, Ivie | 45, Avenue Road, Forest Gate. |
| Drewry, Thos. | 11, Glenpark Road, Forest Gate. |
| Duff, Thos. | Lynton House, Atherton Road, Forest Gate, E. |
| Duncan, J. | 58, Margery Park Road, Romford Road, E. |
| Duncan, R. | Stopford Villa, Chaucer Road, Forest Gate. |
| Du Sautoy, C. S. | Linden, Denzil Terrace, Southampton. |
| Elms, Chas. | Bute Docks, Cardiff. |
| Fairley, J. | Glasgow Road, Dumbarton. |
| Fenton, W. | Grove Lane, Kingston-on-Thames |
| Ferguson, J. | National Line, R. Albert Dock. |
| Ferguson, John | 46, Margery Park Rd., Forest Gate |

Digitized by Google

LIST OF MEMBERS—*Continued.*

| | |
|---|---|
| Ferguson, R. | 2, Albert Drive, Crosshill, Glasgow. |
| Fish, T. W. | Kirklands, Dunbar, N.B. |
| Fletcher, W. R. | 312, Rue Danebrugge, Antwerp. |
| Fownes, G. E. | Merchant's Exchange, Cardiff. |
| Gatrell, M. | 12, First Avenue, Manor Park. |
| Galley, J. G. | Neville Road, Upton Park, Essex. |
| Gardiner, W. | 46, Durham Road, Manor Park, E. |
| Gauldie, R. L. | P. & O. S. N. Co., R. Albert Dock. |
| Gibb, A. | 30, Smith Street, Greenwich. |
| Gibb, Alf. W. | Eastern Telegraph Co., Malta. |
| Gibson, David | 18, Clevedon Terrace, Roath. |
| Gillespie, D. | 2, St. John's Avenue, West Ham. |
| Gilchrist, M. | 56, East Road, West Ham. |
| Girvin, J. | Market Place, Carrickfergus. |
| Gray, J. McF. | 1, Claremont Road, Forest Gate. |
| Graham, J. J. | P. & O. S. N. Co., R. Albert Dk. |
| Grant, John | 5, Glen Street, Greenock. |
| Greer, D. | 13, Teviot Street, Bromley, E. |
| Hammet, Hy. | 101, Chesnut Avenue, Forest Gate |
| Harris, W. | 39, Albert Road, Forest Lane, Stratford. |
| Hawthorn, J. G. | 20, East India Dock Road, Poplar. |
| Henderson, D. | Cardrossbank Villa, Cardross, Dumbartonshire, N.B. |
| Hudson, C. | Woodlands, Disraeli Road, Forest Gate, E. |
| Humphreys, W. | 71, Sackville Street, Liverpool. |
| Hodgson, S. | 9, Hartley Street, W. Hartlepool. |
| Inglis, Geo. | 3, Capel Road, Forest Gate, E. |
| Ives, Henry | 23, Pigott Street, Limehouse. |
| Johnson, A. | 3, Dares Behning Villas, Borthwick Road, Leytonstone, E. |
| Joy, D. | 9, Victoria Chambers, Westminster. |
| Johnson, F. C. | 72, De Brugh Street, Cardiff. |
| Kidd, G. W. | 227, Romford Road, Stratford, E. |
| Kirkland, J. | 17, Salisbury Road, Forest Gate. |
| Kirkwood, J. | Barking Road, Canning Town. |
| Laing, W. P. | Silvertown, Woolwich. |
| Lawrie, A. | (Mogul S. S. Co.), Glasgow. |
| Leslie, Rbt. | Mayfield, Sprowston Road, Forest Gate. |
| Lockie, J. | 2, Custom House Chambers, Leith. |

Digitized by Google

LIST OF MEMBERS—*Continued.*

| | |
|---|---|
| Lowe, Wm. | 95, Rosevale Place, Stranraer. |
| Lowe, J. Y. | Levengrove Ter., Dumbarton. |
| Maginnis, A. J. | 155, Fenchurch Street, E.C. |
| Manuel, G. W. | Eildon, Catford, Kent. |
| Marshall, R. | 121, Fenchurch Street, E. C. |
| Menzies, Alex. | Arleadie Bank, Banchory, N.B. |
| Mair, D. | 559, Barking Road, Plaistow. |
| Melsom, C. L. E. | 16, Hilda Road, Brixton, S.W. |
| McCallum, John | Bute Docks, Cardiff. |
| McCallum, Jas. A. | Bute Docks, Cardiff. |
| McCallum, D. B. | Bute Docks, Cardiff. |
| McCallum, D. | 9, Fitzalan Place, Cardiff. |
| McLachlan, J. | 20, Maryland Road, Stratford. |
| McLaren, John | 8, Whitehall Villas, Grays, Essex. |
| McKellar, M. C. | Mogul S. S. Co., Glasgow. |
| McIndewar, A. | Hospital Street, Glasgow. |
| McLean, N. K. | Endrick Villa, Cann Hall Rd., E. |
| McMillan, D. | Ingleside, Elmhurst Road, Upton. |
| McMurchy, A. | Madawaska Cottage, Troon, N.B. |
| Mackintosh, Ed. | 3, Railway Terrace, Inverness. |
| McOnie, Jas. | 34, Claremont Street, Glasgow. |
| McPhail, P. | 6, Clarence Street, Edinburgh. |
| Morgan, G. Ll. | Myrtle Castle, Llanelly. |
| Mollison, R. | Grecian Villas, Howard's Road, Plaistow, E. |
| Newall, G. W. | 12, Litchfield Terrace, Upton. |
| Nichols, F. | 47, Cecil Road, Upton Manor. |
| Nicoll, J. | 24, The Green, Stratford. |
| Nicholson, D. | 16, St. Helen's Place, E.C. |
| Nixon, W. G. | Rosemount Villa, Stapleton Road, Bristol. |
| Noble, C. | 65, Khartoum Road, Plaistow, E. |
| Northcott, W. H. | Hatcham Iron Works, Pomeroy Street, New Cross Road, S.E. |
| Ogden, Lewis | 85, Edinboro' Street, Goole, Yorks. |
| Page, F. H. | 77, Gracechurch Street, E.C. |
| Pearson, G. | 185, Barking Road, Canning Tn. |
| Phillips, D. | Chipping Sodbury. |
| Phillips, Jas. | 478, Lee Terrace, Barking Road. |
| Prior, Henry | 37, Thistlewait Street, Clapton, E. |
| Prior, M. | 101, King Edward's Road, South Hackney, E. |

Digitized by Google

LIST OF MEMBERS—*Continued.*

| | |
|---|---|
| Purves, David | Ferro Dene, Green Lane, North Dulwich, S.E. |
| Purvis, W. A. | 21, Spellow Lane, Walton, Liverpool. |
| Rait, H. M. | 1, Nester Terrace, N.W. |
| Ramsay, W. | 10, Granville Terrace, Stratford. |
| Randall, W. J. | Clifton House, West Ham, E. |
| Reed, Thos. A. | Merchants' Exchange, Cardiff. |
| Reid, D. | P. & O. S. N. Co., R. Albert Dock. |
| Reid, T. H. | 10, York Road, Grays, Essex. |
| Reid, John | 14, Shaftesbury Terrace, Kensington, W. |
| Rankin, John | 16, Ribblesdale Road, Hornsey. |
| Richardson, J. W. | Jesmond, Wallwood Road, Leytonstone. |
| Riley, Chas. | 44, Windmill Street, Gravesend. |
| Robertson, A. W. | Pitfour, Ilford, Essex. |
| Robertson, J. | 11, St. Andrew's Road, Plaistow. |
| Robertson, A. | 55, Clova Road, Forest Gate, E. |
| Roberts, W. C. | 18, Windsor Road, Forest Gate. |
| Ruthven, J. R. | 19, Canton Street, Poplar, E. |
| Rowe, J. A. | 13, Hampton Road, Forest Gate. |
| Sage, S. C. | 47, Cecil Road, Plaistow, E. |
| Scobie, A. | 61, Claremont Road, Forest Gate. |
| Sevenoaks, Ed. | 92, Iniskin Street, Cardiff. |
| Shorey, F. W. | 5, Pennyfields, Poplar, E. |
| Shepherd, G. B. | 6, Crosby Square, E.C. |
| Simpson, J. | National Line, R. Albert Dock. |
| Simpson, W. | 46, Leyspring Road, Leytonstone. |
| Sinclair, J. | 9, Rutland Place, Glasgow. |
| Sinclair, Jn. | (Mogul S. S. Co.), Dunbarton. |
| Sinclair, R. | 10, Parsons Green Terrace, Edinburgh. |
| Slater, Ch. | 46, Alfred Street, Bow, E. |
| Smith, John | Rosewood Villa, Chaucer Road, E. |
| Smith, P. | 3, Ferns Road, Romford Road, E. |
| Snell, R. G. | P. & O. Dockyard, Mazagon, Bombay. |
| Stark, Henry | 34, Mar's Terrace, Crescent Road, Plumstead, Kent. |
| Stevenson, J. | 22, Disraeli Road, Forest Gate. |
| *Stevenson, W. | 4, Finnart Street, Greenock. |

* It is with deep regret we have received intimation of the death of Mr. W. Stevenson, on January 21st, 1890.

Digitized by Google

LIST OF MEMBERS—*Continued.*

| | |
|---|---|
| Stenhouse, A. | 18, Shortridge Street, South Shields. |
| Steward, Jn. | Church Place, Barking Road, Canning Town, E. |
| Steward, Jas. | 49, Shrubbery Road, Gravesend. |
| Steward, John | Blackwall Iron Works. |
| Stephens, Jas. | 10, S. Crescent, Ravensbourne, Lewisham, S.E. |
| Stirling, J. | China Mutual S. S. Co. |
| Sommerville, A. | 128, Osborne, Road, Forest Gate. |
| Storrar, M. C. | 110, Terrace Road, Upton Manor. |
| Tait, John | 6, Morton Terrace, Greenock, N.B. |
| Taylor, John | 25, Leven Street, Dumbarton, N.B. |
| Taylor, M. B. | 9, Montague Road, Tottenham Lane, Hornsey. |
| Taylor, W. J. | Belmont Road, West Green, N. |
| Taylor, W. M. | 106, New Road, Grays, Essex. |
| Thompson, J. H. | 26, Ethel Road, Custom House. |
| Thompson, Arch | 108, Fenchurch Street, E.C. |
| Thorburn, T. | P. & O.S.N. Co., R. Albert Dock. |
| Thornton, R. P. | 62, Teviot Street, Poplar, E. |
| Turnbull, M. | 1, Park Street, Avenue Place, Renton, Dumbarton, N.B. |
| Tyler, J. J. | 150, Malmesbury, Road, Bow, E. |
| Urquhart, D. | 2, Orchard Street, Renfrew, N.B. |
| Walker, J. M. | 14, Cumberland Road, Manor Park. |
| Walker, W. C. | 176, Sebert Road, Forest Gate. |
| Watson, A. | 38, Clarence Road, Manor Park. |
| Watson, J. | 119, Paisley Road West, Glasgow. |
| Watson, T. F. | 3, Pelly Road, Plaistow, E. |
| Warner, J. | 30, New City Road, Plaistow, E. |
| White, F. J. | 50, Cedars Road, Stratford, E. |
| White, W. | 53, Romford Road, Stratford, E. |
| Weir, J. | Holm Foundry, Cathcart, Glasgow. |
| Weir, G. | Holm Foundry, Cathcart, Glasgow. |
| Wilson, W. W. | 476, Barking Road, Plaistow, E. |
| Williams, Jas. | Port Bannatyne, Rothesay, N.B. |
| Williams, Jos. | 204, St. Andrew's Road, Birmingham. |
| Williamson, D. | Orient Line S. N. Co., Tilbury. |
| Wilkinson, J. | P. & O.S.N. Co., R. Albert Dock. |
| Wilkinson, G. J. | 2, White Lion Court, Cornhill. |

Digitized by Google

LIST OF MEMBERS—*Continued.*

| | |
|---|---|
| Winterburn, W. G. | 14, Silver Street, Whitby. |
| Wymer, F. W. | Cartsburn, 4, Forest Drive, Leytonstone, E. |
| Wiltshire, G. | Thames Ironworks, Tidal Basin. |
| White, H. W. | 122, Lavender Hill, S.W. |
| Young, Alex. | 3, Cadogan Terrace, South Hackney, E. |
| Young, J. | 94, Warwick Road, Romford Road, E. |

## LIST OF HONORARY MEMBERS.

T. F. AUCKLAND.
R. BELDAM.
J. W. DOMONEY,
W. B. DICK,
J. DOWNTON,
J. S. GREEN,
J. W. HAY,
H. E. LESTER,
Prof. B. V. LEWES,
E. H. MINNS,
J. NEWTON,
THOS. W. PERKINS,
W. REID,
J. THOMSON,
WM. WATKINS.

Digitized by Google

## LIST OF ASSOCIATE MEMBERS.

| | |
|---|---|
| Barclay, R.M. | 12, Penhurst Road, South Hackney. |
| Black, P. M. | 8, Eldon Street, Greenock. |
| Crawford, D. | 175, Scotland Street, Glasgow. |
| Ellis, T. H. | 158, Great Dover Street, S.E. |
| Kirkwood, R.A. | Clinkeehan House, Clones, Ireland. |
| King, G. | 162, Malpas Road, Brockley. |
| McKenzie, T. A. | P. & O. S. N. Co., R. Albert Dock. |
| Philip, Thos. | Portstown, Inverurie, Aberdeen. |
| Robbins, J. B. | White Hart, Grays, Essex. |
| Small, J. B. | P. & O. S. N. Co., R. Albert Dock. |
| Struthers, Robt. | 1, Cathkin Terrace, Mt. Florida, Glasgow. |
| Thomas, W. M. | Trinity - Ville, Upton Cross, Plaistow. |

## LIST OF ASSOCIATES.

| | |
|---|---|
| Brett, W. J. N. | Hopetoun House, Margery Park Road, Forest Gate, E. |
| Brooks, A. | 66, Chobham Road, Stratford. |
| Gale, John | 55, Chauntler Road, Victoria Dk., E. |
| Highet, Jas. (junr.) | 25, Regent Street, Greenock. |
| Hussey, F. J. | 64, East India Dock Road, Poplar, |
| King, C. P. | Royston Ho., Carlton Road, Putney. |
| Lochhead, D. | 11, Crescent Street, Greenock. |
| Montgomerie, Jn. | 25, Brisbane Street, Greenock. |
| Parsons, R. | P. & O. S. N. Co., R. Albert Dock. |
| Sage, S. C. W. | 47, Cecil Road, Plaistow, E. |
| Stalker, A. C. | Dollar, Stirlingshire, N.B. |
| Stevenson, A. L. | 1, Hurn Villas, Priory Road, Southampton. |
| Stokes, C. R. | 100, Drakefell Rd., Brockley. |
| Watt, J. H. | 25, Chauntler Rd., Victoria Dk. |
| Young, J. McD. | 94, Warwick Road, Romford Rd. |

## LIST OF GRADUATES.

| | |
|---|---|
| Craig, W. J. (junr.) | Pendower, Earlham Grove, Forest Gate, E. |
| Fortune, Wm. | 2, Cranbourne Villas, Leyton, E. |
| Fraser, Jas. | 4, St. Andrew's Road, Plaistow. |
| Rankin, Geo. | 86, Trinity Street, Canning Town. |
| Thompson, F. W. | Mile End Gate, E. |

Digitized by Google

# INSTITUTE OF MARINE ENGINEERS.

**SESSION, 1889.**

---

# FIRST PAPER

BY

## MR. A. J. MAGINNIS,

(MEMBER)

ON AN IMPROVED

# STEERING GEAR

**Read Friday, 5th April, 1889.**

---

PRICE SIXPENCE.

STRATFORD:
WILSON AND WHITWORTH, PRINTERS AND LITHOGRAPHERS, BROADWAY HOUSE

Digitized by Google

Digitized by Google

# PREFACE.

THE LANGTHORNE ROOMS,

17, BROADWAY,

STRATFORD,

*5th April*, 1889.

A meeting of the Institute of Marine Engineers was held here this evening, at 8 o'clock, Mr. J. H. Thomson, one of the vice-presidents, in the chair. About 60 members and visitors were present. Letters were received from Messrs. A. Beldam (president), J. Mc F. Gray (vice-president), H. M. Rait (vice-president), A. Daniels (member), and a telegram from Mr. A. J. Maginnis (author of the paper), expressing regret that previous engagements or detentions elsewhere prevented them being present to take part in the proceedings, especially at the inaugural meeting. Mr. Maginnis himself was detained by a Trial Trip at Newcastle.

In the absence of Mr. Maginnis, Mr. J. R. Ruthven read the paper on the Maginnis' Patent Steering Apparatus, which was illustrated by diagrams and drawings.

A discussion ensued, and a series of questions were proposed and replied to by Mr. A. Gibb, representing Mr. Maginnis.

The following members took part in the discussion, *i.e.* :— Messrs. A. W. Robertson, W. J. Craig, J. Hawthorn, H. Barringer, J. Dimmock, A. Gibb and others.

A minute of the proceedings is given in detail in the following pages.

Mr. Maginnis being detained at a distance, and the paper he had specially prepared not being at hand, an older paper, read at the Institution of Naval Architects in 1886, was read. The Arrangement of gear has been somewhat modified since then, a lithograph showing the present arrangement is shown as an addendum, from which it will be seen that much of our discussion was anticipated.

JAS. ADAMSON,

*Hon. Secretary.*

Digitized by Google

Digitized by Google

ON

# AN IMPROVED SYSTEM

OF

# STEERING GEAR

BY

MR. A. J. MAGINNIS

MEMBER.

Digitized by Google

Digitized by Google

ON AN

# IMPROVED SYSTEM OF STEERING GEAR

---

SINCE the introduction of Mr. MacFarlane Gray's useful invention of the steam steering gear, numerous types have been introduced differing in application and valve arrangement, but all more or less depending upon his principle of controlling gear, which must be considered the essential point of the application of steam power to steering.

With but few exceptions, the method was adopted by all, of applying the gear to the rudder quadrant by means of wheel-chains (owing, no doubt, to Mr. Gray's success), and is still generally adhered to, notwithstanding the serious drawbacks of holding the rudder absolutely rigid, excessive noise, and heavy cost for maintenance both of chains and machinery. During prosperous times, when shipping investments proved remunerative, and expenditure was not severely criticised, these points did not receive the serious consideration now given them, and it was with a view of remedying these defects that the system of steering gear now brought forward was designed, and also to still further provide against the loss or disablement of rudders, a too frequent occurrence.

Digitized by Google

As may be seen on reference to the drawings, this system (which has been thoroughly tested in the North Atlantic trade) consists in placing an ordinary steering engine with the simplest possible controlling gear, on one side of the fore and aft centre line of the ship, and applying the power to the rudder, by inserting the shaft into a worm geared in the quadrant; two feathers then serve to turn the worm which is free to travel endways on the shaft to either side, so that the thrust may not be taken in any way by it, but upon a piston connected to the worm on the opposite side, which is placed midway in a cylinder full of liquid, so as to transfer the thrust to the vertical volute springs shown on top of the horizontal or cushion cylinder.

To prevent the worm being forced back out of gear, and to guide it in a true central position when sliding from one side to the other, a roller bearing is placed just behind it, which is fitted with two long guide rollers placed one on the top centre and one on the back centre, outside of the circumference of the worm thread, the lower portion being formed to hold the lubricant; this, it will be observed, keeps the worm at all times true to position when it is working as a rack, at the time of yielding.

The essential feature, however, of the whole system, consists in what is termed the cushioning gear, which provides a movable thrust of the worm, and by so converting it into a rack ensures the flexibility so necessary for all rudders exposed to heavy weather. This movable thrust is obtained by placing the worm piston in the cushion cylinder, which is filled with liquid up to the hydraulic pistons in the vertical or regulating cylinders, and kept so by the pipe connected to the small reserve tank; then, when the worm is in exact mid-gear, the piston closes this pipe, and on the strain of moving the helm coming upon it, the liquid will be shut up by the worm piston, and the thrust be transferred to whichever of the spring-loaded pistons it is moving towards. Should the worm piston move from its position (which it will do owing to the spring yielding), the charging pipe will be opened behind it and liquid drawn in from the tank, to be again forced back on the return of the piston, thus ensuring the cushion cylinder being always kept full, and the certainty of the gear and rudder returning to their original position after the effects of the blow have been spent.

The strain from the volute springs is then taken upon the main crossheads, which are attached to the standards screwed into the regulating cylinders, and so arranged as to be adjustable to suit the height required by the volute springs. These latter are

Digitized by Google

placed between the hydraulic pistons and tension crossheads, and can be screwed down by the tension rods and nuts, so as not to compress or yield until the load required to hold the helm hard over at full speed has been exceeded; to prevent too much compression or yield of the volutes (which might allow of the worm being forced so far over as to get out of gear) check nuts are placed upon the tension rods, which only allow the springs to yield until they come up against the crosshead.

To ensure elasticity at all times, a light spring is placed between the main and tension crossheads, which compresses or expands on the least change from port to starboard. As regards the design of the pistons, those fitted in the regulating cylinders are formed with the usual hydraulic cup leathers, whilst the worm piston, owing to its revolving and taking pressure on either side, is fitted with two cup leathers, one for each side, and so arranged that they do not revolve with the piston.

It will be noticed that by taking the thrust on the piston, one of the great power-absorbing qualities of a worm, namely, thrust friction, is to a large extent eliminated by the fact of the piston revolving on liquid.

As it is necessary that the steam gear should at all times be readily disconnected, a pipe is fitted communicating with both ends of the cushion cylinder, which only requires the stop-cock to be opened, and thus allow the fluid to pass from one side of the piston to the other, when the worm will instantly run out of gear.

Owing to all the strains and jerks of the rudder coming upon the fluid, it is evident that their force can be easily ascertained: first by placing an ordinary pressure gauge on each regulating cylinder, and secondly by attaching a Richards' indicator to the communication pipe, and working the barrel from the rudder head. As a result of this, the writer has now the pleasure of bringing forward what he believes to be the first actual indicator diagram obtained of the strain on the rudder.

This was taken about September last (1885) in smooth water on the run down to Queenstown, from the gear fitted on the s.s. *British Prince*, a Liverpool steamer of 4,000 tons, trading to Philadelphia.

Digitized by Google

In the December following a second set of diagrams were taken, a short notice of which, as well as of the first one, will prove interesting. By the first card it will be seen that the *power* required to hold the helm hard over was 3·5 tons for a speed of 12¼ knots and an immersed rudder area of 101 square feet; whereas on the November voyage, for the same speed, but immersed area of 104 square feet, the load as shown by the gauge (no diagrams being taken) was about 4·5 tons. With the same immersed area, but increased speed of ship to 13 knots, this load was raised to 5·6 tons, as measured on the December diagrams. A close examination of the starboard figure shows that on reaching the angle of 24 degrees, something interfered with the working of the indicator, as it failed to record the correct pressure, but fortunately an effectual check of the load remained in the pressure gauge, which, by recording 290 lbs per square inch, proved the load for the starboard helm to be exactly the same as the port, namely, 5·6 tons.

The differences in the indicated pressure between the port and starboard figures at the angles up to 4 degrees, distinctly show the effect of the right-handed propeller, as do also the pressure gauges, the one for starboard thrust always showing pressure when the helm is amidships.

A further development of the means taken to ascertain at all times the strains or jerks to which rudders are liable, is now being made, with an arrangement of two indicators (one for port and one for starboard) continuously recording on paper, which is wound from one drum to another by means of strings to the rudder head and a simple ratchet attachment, so that it is hoped the rudder will to a certain extent become its own autobiographer.

By watching the pressure gauges in heavy weather, some idea of the varying nature of the strain can be formed, although with the gear no noise or sound is heard to draw attention to it; but amongst several cases may be mentioned one, noticed by the writer in a heavy sea near Holyhead. The helm was over to starboard, and the guage registering 160 lbs., equal to a 3-ton load, when suddenly the ship was felt to be lifted by a heavy following sea; at the same moment the pressure on the gauge fell and almost instantly rose on the port thrust gauge to about 200 lbs., which meant a load of about 14½ tons put upon the rudder and gear in a reverse direction to the legitimate strain. This change of strain was again noticed during a hurricane in mid-Atlantic when a terrific following sea was running, the

Digitized by Google

pressure suddenly falling upon one gauge from 175 lbs. and rising on the other to considerably over 300 lbs., or say a load of about 24½ tons. So far as has been yet noticed, this appears to be the greatest strain yet upon the rudder and gear, but no doubt much heavier loads will be experienced, and will in future always be recorded by the arrangement already described, which it is proposed to briefly term the "Ruddergraph."

From the description of this system it may be seen that although the first object aimed at, was the reduction of heavy cost for maintenance, other essential features were not lost sight of, but on the contrary proved valuable aids in developing the cushioning arrangement, and so providing an elastic rudder holder, seldom under pressure, and capable of being adjusted to a maximum impact load, by a Supervising Board.

In conclusion the Writer would like publicly to express his indebtedness to the Owners, and also his best thanks to the Commander and Engineers for the willing assistance at all times given him, which has enabled him to bring forward information tending to advance the still faint knowledge of "*Rudders, and their strains, steering gears and their requirements,*" minor but all-important factors of the modern war-ship, "Greyhound," or pleasure yacht.

---

## MR. A. W. ROBERTSON'S REMARKS:—

I am not by any means clear on the working details of the gear brought before us to-night, and I would like to have a few explanations from the Author's representative on one or two points.

1. Is the sleeve shown in connection with the crank-shaft and piston rod of cushioning cylinder a fixture on crank-shaft or piston rod, and how is the attachment arranged?

2. Is the thrust thrown upon the worm-shaft taken up entirely by the cushioning cylinder, or is it partly by collars on the crank-shaft?

3. How is the port way leading into spring boxes so much nearer the one end of the cylinder than the other?

4. When the thrust upon the Rudder is very severe, will the worm not be put out of its normal position, increasing the leverage of the teeth and making the worm at the extreme travel weaker and more liable to break than if you could at all times maintain the working at the Pitch Line?

Digitized by Google

## MR. WILLIAM J. CRAIG'S REMARKS:—

Steering Gear, as we all know, is a very important detail of Marine Engineering, and this special gear, I understand, is well worthy of the place it takes in initiating the course of papers in our new Institute, and personally, being much interested in the subject, and knowing little about the gear to be laid before us to-night, with the view of so far qualifying myself to intelligently follow the Paper, I took advantage of an opportunity of making myself slightly acquainted with its general features by inspecting one fitted on a Steamer now in Port. At the time of my visit the gear was all closed up and connected for work, and little could be seen except the general arrangement, which I consider to be well adapted and ingeniously applied.

Regarding the "Cushioning Apparatus," I am not sure that I understand it yet, though I hope to be better informed presently, and before committing myself I would here like to observe that in discussing the matter of a recently patented speciality, such as the one before us, the result evidently of long and careful working out, one requires to exercise considerable caution, lest on the one hand presumption carries wisdom and discretion away, and admits folly, or on the other hand, modesty closes the avenue of criticism, and thus the benefits derived from a good discussion are minimised; however we may be permitted to touch upon the points that do not seem clear to us, if only in the way of formulating the same, to better enable the Author to deal with them in any reply he may make for our information, and to enable us the better to appreciate the merits of the Apparatus.

With these remarks governing what I have to refer to, I may begin by observing that what I saw this afternoon, I now recognise to be a similar arrangement to that before us. My first impressions were influenced by several cumbrous-looking cases, arranged vertically, which, if indispensable, I thought would not be very suitable anywhere outside a protected space, or would at least require to be away from the working gear of the Steamer. To my idea it did not appear to be capable of being as snugly arranged, say on an open poop or deck as some other gears are; however, there might be simplified arrangements to suit special cases. I am only referring to that I saw, as space can generally be found, or provision can be made in building new steamers, so that the want of a protection need not be a valid objection to an otherwise suitable gear. It occurred to me, however, that considerable space, and perhaps constructive cost, might be saved without sacrificing much efficiency, if any, for a much snugger

Digitized by Google

arrangement, if the springs or some "cushioning" gear could be fitted inside the cylinder, on each side of the piston, or on the covers, — doing away with the vertical "spring-towers" altogether—thus saving the space and giving a better appearance to the whole. As this gear seems to be carefully thought out in design, probably the ideas I have indicated may have occurred to the Author also, and we may be assured of a satisfactory reply to the queries :—

1. Whether and what objections there may be urged against a cushioning arrangement in the cylinders or piston?

Next, I observed that the worm-shaft is apparently connected by an ordinary flange secured with small bolts,—possibly there may be a recess (which is not visible without a section)—to the worm-sleeve, with which it must necessarily revolve, and I should fancy with considerable velocity at times, and I am led to ask the following questions :—

2 Are the bolts subject to the same concussion shock as the rudder, when they are in tension?

3. If so, and they should fail, would the worm-sleeve run out of gear?

4. If it would, what would happen? Would the Steamer thereby become unmanageable, as far as the gear is concerned?

5. Or, are there other checks to provide for such a contingency?

If it be the case also that the worm-shaft revolves with some velocity at times within a limited travelling space, I would further ask :

6. Is the piston end of same not subject to excessive wear at some point within the pressure cylinder, involving leakage past the piston, thus affecting "cushioning efficiency" more or less?

The toothed "segment" on the quadrant engaged by the "worm" and the "worm" itself, both appear to be rough castings, not machined, consequently there must be some clearance between them, which must be increased by the wear, due especially to the minute vibrations not taken up by the cushioning gear, when the rudder is working most, *i.e.*, at the smallest angles from a midship helm (and not when working hard over). The vibrations being more intense (though minute) are more wearing on the worm, which in these circumstances has the additional duty thrown upon it of steadying the rudder entirely through its contact (with clearance) with the toothed quadrant. This clearance must also be more considerable when the worm travels either way—being less in gear—under the influence of greater shocks due to the greater leverage.

7. Would this not soon be detrimental to the toothed gearing, and open to the chief objections in most gears, viz. :—Producing the chattering noise due to vibration?

Digitized by Google

In referring to the gear as a whole, as before indicated in comparison, of course, with a standard of perfection, I submit, would it not be better if the vibration and shocks were cushioned within the circumference of the quadrant, and before passing through the whole "Steering Apparatus" to its destination in the "Cushion Cylinder." It appears to me that the shocks transmitted through the intervening gear must be detrimental to that gear. Roundly speaking, why not check at once these shocks, which are shown to be very severe, and with diagrams of which the author has so ably completed his paper, and I think he may justly claim them to be a most reliable source of data, gained as they are from the instrument designed and used in connection with his gear. I would repeat, why pass all these terrible strains through the "Steering Apparatus," which, mark well, has its own important duty in the navigation of the Steamer, surely enough to expect it to do properly in the best of best conditions, without any other duty with which it has nothing whatever to do? Why not fit the cushioning gear separate, placing it before, and not behind, the steering apparatus? Say, direct on the rudder quadrant or tiller, thus dealing on the spot with a cause of trouble and leaving the steering apparatus to do its own work under better conditions; free from any disturbing influences.

The course of discussion, or the author's reply may elucidate or explain some of the points to which I have referred; at any rate, I have no doubt we will all, after this interesting paper, and the ideas brought into play in connection with it, better understand the duties and functions of steering gears, and this gear in particular. The objects of our meeting indeed, include the attaining of a knowledge of the specialities which meet us as practical Engineers day by day, and our Institute was established with a view to this end, and I trust we will all benefit not only by what we have heard, or may hear this evening, but by many similar meetings yet to come.

---

## MR. J. HAWTHORN'S REMARKS:—

Before making any remarks on the subject matter of the paper, the unavoidable absence of the author of which I am sure we all regret, I would congratulate the Council of the Institute in having such a representative audience at this—our first—meeting for discussion, and in having such an interesting paper laid before us. I have followed the reading of the paper, and to dispel a few doubts, I would, with his kind permission, put a question or two to Mr. Gibb:—

1. Am I right in assuming that the Volute Springs are acting on openings equal in area at each side of the Piston? If so, how is the difference of Piston areas due to the Piston Rod in the Cushioning Cylinder met with? Is it not rather the difference of compression to which they are subject?

Digitized by Google

2. Instead of the oil being forced up a pipe into a receiving tank as it appears to be, could it not be usefully employed to pass from one end of the Cylinder to the other? (My reason for asking this question, is that it was my experience to be shipmate with an engine of the kind known as the Single Tandem, there we had a large fly-wheel with teeth in the rim. An engine was laid horizontally, whose line of motion was a tangent to the fly-wheel, this engine being employed to pull the main engine off the centre, should it at any time remain there while in the act of reversing or starting; here we had a Cushioning Cylinder, and to prevent the kick when the claws came out of gear, we could regulate the speed by opening a communication pipe from one end of the Cushioning Cylinder to the other).

3. There is another point I am not very clear about, viz.:—How in the diagrams is the severity of the strain arrived at? If I am right I believe the diagrams are made in the usual method, as by an ordinary Indicator and the line of motion by means of the paper rolling off one barrel on to another as the Rudder is made to pass through any angle, surely the Rudder must move to make the paper travel longitudinally. How then is the shock due to a blow, say from a following sea made to manifest itself on the Indicator Card?

4. Will this system of Steering Gear obviate the necessity of the large stuffing boxes and glands through the deck, such as we have and require for all other gears with which I am acquainted?

---

## MR. A. GIBBS' REPLY.

I have listened with great interest to Mr. Craig's extended remarks. I am sure he must have spent a long time on board the ship this afternoon, and I am glad he did so. I will answer his questions as fully as possible; but his remarks being written out, and so long, I am afraid I will not be able to follow them in rotation. I would, however, be glad to do so, if he would hand over to me his written remarks.

Mr. Craig saw the gear after having been at work for about nine months, and found it all closed up; not an unusual case, for, when the gear is fitted, it requires little or no attention for years. This is sustained by the fact of similar gear having been at work for about four years, in the Western Ocean trade, and costing little or nothing for repairs up to the present time.

As to the Cushion Cylinder, I agree with Mr. Craig as to its unsightliness, but must remind him these were the first designs, and we have always fitted them under cover, so that, in handling the steamer, none of the running gear could foul the cushion cylinder in any way.

Digitized by Google

There are several designs of this cylinder in which the whole, of the unsightliness, to which Mr. Craig refers, has been got over; and this cylinder is now only half the height shown in the drawing.

The springs could not be put inside the cylinder as suggested it would only add length to it, and greater floor space would be required.

Mr. Craig would notice when he was on board the steamer to-day that one inch could not be added to the length of the present cylinder, as it was already close up to the counter of the ship, and was very snugly arranged, one of the great points in the gear being to make the cushion cylinder as short as possible.

The Piston Rod of the cushion cylinder is connected with a solid wrought flange to the worm, the coupling bolts are subject to a certain amount of rudder strains in tension, and are carefully calculated for that, the combined sectional area is greater than the sectional area of the piston rod, the bolts are thus dimensioned in the usual way. In the event of piston rod or bolts breaking, a most unlikely event, the worm would run out of gear, when the hand gear could be shipped at once. All other gears have more than one hundred chances to break down, as compared to this gear, for, when chains or rods are applied, every link and every joint has a chance of breaking; therefore you will see at once how much more safe is the gear now under discussion.

There is no wear in one part of the cylinder more than in another. This has been carefully provided against; the cup leathers in the cylinder do not revolve, so there is no tear or wear.

The toothed segments and worm are not machined, but are carefully made, so that they are a proper fit. We have found from experience that with the skin on the castings they work well. I would just say that the worm or toothed gear of this quadrant has from one-tenth to one-sixth less work, or less revolutions than any other gear in the market; this also means a saving of steam for the engines working the gear. In the event of any wear at one part of the quadrant, it can be arranged for the quadrant to be composed of segments, and that one more liable to wear made of a special mixture, practically unaffected by tear and wear.

Digitized by Google

As to the vibrations and shocks being cushioned within the circumference of the quadrant. This style I have also seen, and my opinion, based upon experience in connection with repairing such, is that the tear and wear is very considerable, and even with this arrangement the recoil of the quadrant throws great strain upon the engine.

In reply to the remarks made by Mr. A. W. Robertson and other gentlemen, I have noted their questions, and will now give replies :—

1. There is no Thrust on the engine, the worm is fitted with two feathers into a long sleeve, and so works free on the engine shaft.

2. The engine is fitted with the most simple type of controlling valve, and is worked with the usual rods from the bridge.

3. The worm is the best possible working fit for the quadrant, and cannot possibly work out of the pitch line.

4. The spaces in the cushion cylinder are so arranged that when the hand gear is at work, the worm and piston are pushed back so as to be clear of the quadrant, hence the piston when in mid position relatively to the gear is not in the mid position of the cylinder.

5. There is no vibration on the rudder head. The quadrant and worm are a proper fit, and any working of the rudder is quite noiseless, the cushioning cylinder being full of oil, and arranged with springs. At the same time the rudder may yield to any heavy strains coming upon it suddenly, but it goes back quietly to the position whence it was pushed.

6. The Maginnis gear occupies less floor space than other gear, in fact I may say much less space when you add together all the space occupied.

7. There is a small percentage of pressure, greater on one side of the cylinder than the other; but it is very small, and that happens in all cases where a piston is worked by a rod through a stuffing box. But as you are aware, it causes little or no inconvenience.

---

## MR. J. W. DIMMOCK'S REMARKS:—

It has given me the greatest pleasure to listen to the interesting and highly instructive paper by Mr. Maginnis; also to the remarks of those gentlemen who have taken part in the discussion. It appears to me that several questions asked by previous speakers, have not yet, to my mind, at least, been satisfactorily answered.

Digitized by Google

In estimating the value of the Maginnis Steering Gear, and its place among other steering gears, I think it would be well for us to consider the qualities of an ideal steering gear, and then see in what respects this gear comes up to it.

In an ideal gear, we should have, I think :—

1. A gear which is compact, and occupies small space.
2. Which contains the fewest possible working parts.
3. Which holds the rudder tight and prevents vibration.
4. Which checks all shocks due to the impact of the sea on the rudder by an elastic buffer, or other means, before such shock is transmitted to the working gear.
5. Which works without noise, or almost so.

1st. In the Maginnis gear we find it is not compact, although it occupies but little deck space; the two Vertical Cushion Cylinders should be removed from their present position and provided for elsewhere. Mr. Craig, in his remarks, suggested that they should be put in the place of the cylinder covers, or even the Piston may be made to act as Piston and Cushion Cylinders combined. Mr. Gibb seemed to think this impracticable, but I venture to think, with a piece of chalk and a black-board, I could sketch a Piston which would answer the purpose. The arrangement in the sketch before us clearly shows that these cylinders would be very much in the way of working the ship, being very liable to be caught and carried away by the quarter hawsers or check lines, and in such an event the gear would be rendered perfectly useless.

2nd. We find the Maginnis gear has very few working parts, and therefore not so liable to get out of order as many other gears; in this point, I think, we have a great improvement.

3rd. This gear, I think, is not up to the ideal as to holding the Rudder from vibration, the Rudder moves each way, equal to the necessary amount of clearance between the quadrant and worm. This might be remedied to a certain extent by cutting the teeth of the quadrant by machine, and making the worm fit accurately without clearance, but even then the worm and quadrant will wear, and vibration will take place, the Stuffing Box will have to be looked after as in other gears, and packing used to hold the Rudder steady.

Digitized by Google

4th. The Cushion Cylinder does not prevent Rudder shocks from being transmitted through to the working gear; the worm and quadrant are subjected to the shocks, which, in a heavy seaway are considerable; the Cushion Cylinder in my opinion, ought to be in direct connection with the tiller, as referred to by Mr. Craig.

5th. The Maginnis gear appears to be practically noiseless, with the exception of what may be due to vibration, when the clearance between the teeth of the quadrant and the worm is increased by wear.

In closing, I consider that very great skill and ingenuity have been shown by the inventor in making a combination, which, with a few minor improvements, bids well to become the best steering gear extant, and much in advance of older methods, both steam and hydraulic, than which it is more efficient, silent, and reliable. Referring to the Indicator Diagrams of Rudder Strains, I think we should have before us the relative areas of the Cushion Cylinders on both sides of the Piston, as well as the distance of the Rudder from the Stock, viz.:—The different leverages. These would enable us to arrive at some definite data of Rudder strains. The difference in the pressure between the Starboard and Port Cards I consider due not so much to the action of the Screw Propeller, as to the difference in areas of the Cushion Cylinders, the Piston Rod being at one end of the Cylinder only; the cards properly understood and dealt with will then give a true record of torsional strains the rudder stock has to bear.

---

## MR. GIBBS FURTHER REPLY:—

I thank Mr. Dimmock, on behalf of Mr. Maginnis, for his kind expressions, and as he implies that the questions have not all, to his mind, been satisfactorily answered, with which view I am glad to hear you do not all agree, I will repeat my answers in slightly different form:—

1. It is more compact than any other gear with which I am acquainted, and takes up very much less space, of this you can judge from the drawings now before you.
2. It has also fewer working parts.
3. It holds the rudder tight, and has no vibration, the rudder will yield without noise to any extra strain put upon it, and after the strain is removed the rudder will return to its former position.
4. Hence it checks all shocks from heavy seas by means of the springs connected with the cushion cylinder.
5. It works without noise of any kind.

Digitized by Google

I differ entirely from Mr. Dimmock when he says it is not compact; perhaps not so compact as to be perfect to his mind, but I repeat it is more compact than any other gear in the market, so much so, that in one drawing now before you this gear shows a saving of several cubic feet over the gear now at work, and is about one-third of the weight. As to the vertical cylinder there is one set of designs in which both the width and the height is reduced one half. As to putting the springs on the end of the cylinder, it is not impossible, but it would require very much more deck room. I am of opinion, therefore, that it would not improve the gear. In the case referred to by Mr. Craig, not one inch could be added to the length of the gear, on account of the rudder being so close to the stern of the vessel. I am rather amused to hear Mr. Dimmock say that he could draw down with a piece of chalk, in a few minutes, something that would answer the purpose better, when I consider that Mr. Maginnis has been at the designing of this gear with its various modifications and improvements for several years.

I again thank the various speakers for their expressions of approval, and regret much that Mr. Maginnis himself is not present, as he would have dealt with the subject much better than I have. It is very difficult to follow a long paper, but I may point out that the particulars as to the area of rudder, speed c ship, radius of quadrant, are all mentioned in the paper itself.

---

Digitized by Google

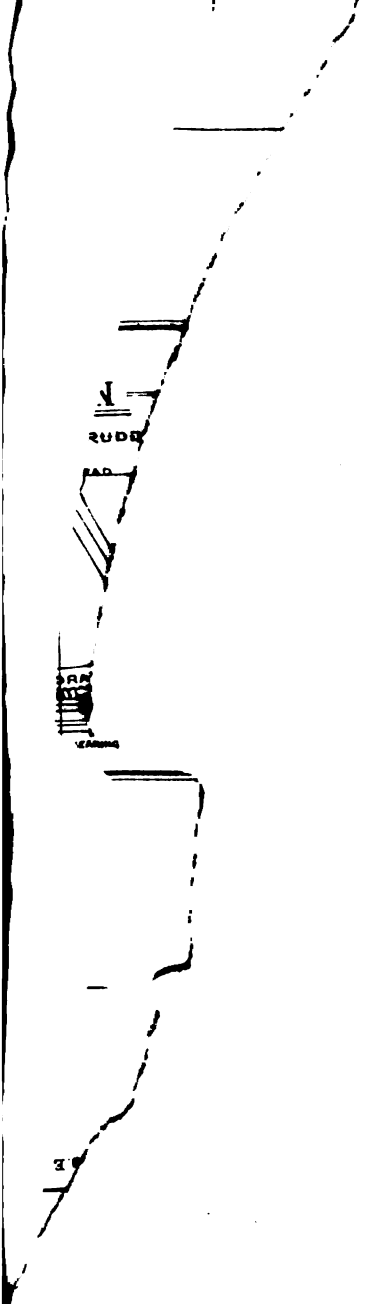

UNIV. OF MICH.

— ...MAWORTH, PRINTERS AND LITHOGRAPHERS, BROADWAY HOUSE

Digitized by Google

Digitized by Google

springs being placed back nuts on the tension rods regulate the com

To throw out th icating to each end of the cylinder and to all

By attaching an en similar to those shown.

[P.T.O.

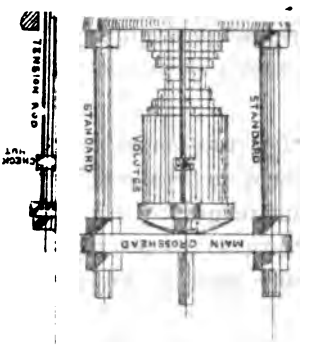

Port

Tons lbs.

243 = 5.67

235 = 5.48

Rudder Angles 40° 36° 32°

Taken by Richard

UNIV. OF MICH.

WILSON AND WHITWORTH, PRINTERS AND LITHOGRAPHERS, BE

Digitized by Google

springs being placed beneath the volute springs, lighter springs being placed between the check nuts on the tension rods regulate the compression of

To throw out the gear it is necessary to each end of the cylinder and to allow the oil

By attaching an indicator in similar to those shown.

[P.T.O.

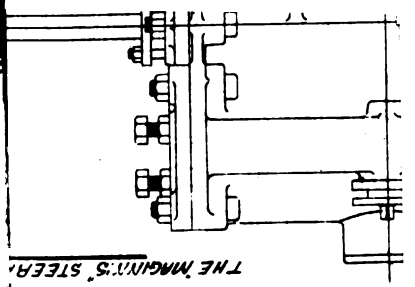

THE MAGINNIS STEERA

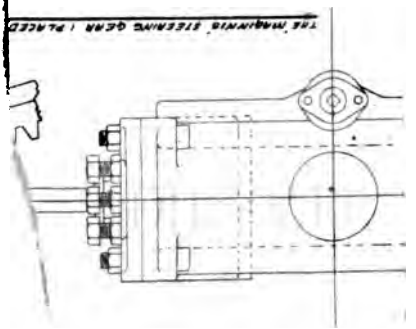

THE MAGINNIS STEERING GEAR : PLACED

# INSTITUTE OF MARINE ENGINEERS

SESSION, 1889.

---

## THIRD PAPER.

MR. G. W. MANUEL, R.N.R.,

(VICE-PRESIDENT),

# CRANK

AND

# SCREW SHAFTING

IN THE

## MERCANTILE MARINE

Read Monday, May 27th. Discussion continued June 6th.

---

PRICE SIXPENCE.

STRATFORD:
WILSON AND WHITWORTH, PRINTERS AND LITHOGRAPHERS, BROADWAY HOUSE

Digitized by Google

Digitized by Google

THE LANGTHORNE ROOMS,

BROADWAY,

STRATFORD,

*June 6th*, 1889.

A Meeting of the INSTITUTE OF MARINE ENGINEERS was held here this evening, when the discussion on Mr. MANUEL'S Paper, read May 27th, was continued.

The following pages contain a Report of the proceedings of both evenings, also the Paper read by Mr. MANUEL on *Shafting in the Mercantile Marine*, with illustrations reduced from the diagrams which were exhibited.

The Meeting on the 27th ulto., was presided over by Mr. J. MCFARLANE GRAY, and on the 6th inst. by the writer. Mr. MANUEL was present on both evenings.

The following intimations were given at the Meetings:—

1. The Registration of THE INSTITUTE OF MARINE ENGINEERS has been sanctioned by the Board of Trade.
2. Over 200 volumes are now in the Library Case in the Reading Room for the use of Members.
3. There will be a recess during the months of July and August, during which the Council will meet on the 1st and 3rd Fridays of the month.
4. The Session will re-open during the first week in September, when a Paper will be read by Mr. W. J. CRAIG or Mr. NEWALL.
5. The Library and Reading Room will remain open as usual every evening from 5 to 10.
6. It is highly desirable that the Home address of every Member, Associate Member, Associate and Graduate, should be sent in without delay for verification of the Books and posting of Notices.
7. Members who have not yet received copies of the first Paper of the Session, may receive them on application at the Reading Room.
8. Brief Reports of our Meetings held to this date have appeared in several well-known Technical and other Journals, as *The Marine Engineer*, *Fair Play*, *The Engineer*, *Engineering*, *Iron*, *The Practical Engineer*, *The Mechanical World*, *Industries*, and in several local papers.

JAMES ADAMSON,

*Hon. Sec.*

Digitized by Google

# SYLLABUS for SESSION 1889-90.

## *APPROXIMATE DATES.

| EVENING. | DATE. | SUBJECT OR TITLE. | AUTHOR. |
|---|---|---|---|
| Monday, 8 p.m. | Sept. 2nd .. | Scientific Triunities (Specially for Juniors) | Mr. W. J. Craig. |
| Tuesday, 8 p.m. | Sept. 24th .. | Radial Valve Gear .. .. | Mr. R. Bruce. |
| Friday, 7.30 p.m. | Sept. 27th .. | Discussion on ditto .. .. | Mr. D. Joy. (to lead). |
| Friday, 7 30 p m. | Oct. 11th .. | Bilge Pumps and Boxes .. | Mr. F. Wymer. |
| Saturday, 7 p.m. | Oct. 19th .. | Forced Draught .. .. | Mr. Jos. Williams. |
| Friday, 7 p.m. | Nov. 1st .. | General Business Meeting .. | |
| Friday, 8 p.m. | Nov. 1st .. | Progress and Development of the Marine Engine | Mr. A. Beldam. |
| *Wednesday 7.30 p.m. | Nov. 20th .. | Marine Boilers .. .. | Mr. G. W. Manuel. |
| *Thursday, 7.30 p.m. | Dec. 5th .. | Application of Zinc .. .. | Mr. J. S Green. |
| *Friday, 7.30 p.m. | Dec. 20th .. | Pistons .. .. .. | Mr. A. Gibb. |

Digitized by Google

# CRANK AND SCREW SHAFTING

IN THE

# MERCANTILE MARINE.

BEING asked to read a Paper before your Institute, I have chosen this subject, as I think no part of the Marine Engine has given so much trouble and anxiety to the seagoing engineer, and from the list of shipping casualties in the daily papers, a large proportion seem due to the shafting, causing loss to the shipowner, and, in some instances, danger to the crew.

My endeavour is to put some of the causes of these casualties before you, also some of the remedies that have tended to reduce their number.

Several papers have been read on this subject, chiefly of a theoretical description, dealing with the calculations relating to the twisting and bending moments, effects of the angles of the cranks, and length of stroke—notably that read by Mr. Milton before the Institute of Naval Architects in 1881. The only *practical* part of this paper dealt with the possibility of the shafts getting out of *line*, and, regarding this contingency, Dr. Kirk said that "If Superintendent Engineers would only see that the Bearings were kept in line, broken crank and other shafts would not be so much heard of."

Of course, this is one of those statements made in discussions of this kind, for what purpose I fail to see, and, as far as my own experience goes, is *misleading*; for, having taken charge of steamers new from the builders' hands, when it is at least expected that these shafts would *be in line*, the crank shaft bearings heated very considerably and *continued* to do so, rendering the duration of life

Digitized by Google

of the crank shaft a short one, and though they were never what is termed "out of line," the bearings could *not* be kept cool without the use of sea water, and occasionally the engines had to be stopped to cool and smooth up the bearing surfaces, causing delays, worry and anxiety, for which the Engineer in charge was in no way responsible.

Happily this state of what I might call *uncertainties* is being gradually remedied, thanks being largely due to those Engineers who have the skill to suggest improvements, and the patience to carry them out against much opposition.

These improvements, in many instances, pertain to the Engine Builders' duties, and are questions which I think have been treated lightly, notably that of insufficient bearing surface, and one of the principal causes of hot bearings, whereby the oil intended for lubrication was squeezed out, and the metal surfaces brought too close in contact, and when bearings had a pressure of 200 lbs. per square inch, it has been found that not more than 120 lbs. per square inch should be exerted to keep them cool (this varies according to the material of which the bearing is composed) without having to use sea water, and prevent them being ground down and thus getting out of line.

I have known a bearing in a new steamer, in spite of many gallons of oil wasted on it, wear down one-eighth of an inch in a voyage of only 6,000 miles, from insufficiency of bearing surface.

Several good rules are in use governing the strength of shafts which treat of the diameter of the bearings only, and angles of the crank, and the Engine Builder along with the Shipowner has been chary of increasing the surfaces by lengthening the bearings, for to do this means increase of space taken up fore and aft the vessel, besides additional weight of engine.

Engine Builders all aim in competing to put their engines in less space than their rivals, giving same power and sometimes more. I think, however, this inducement is now more carefully considered, as it has been found more economical to give larger bearing surfaces than to have steamers lying in port refitting a crank shaft along with the consequences of heavy bills for salvage and repairs, also the risk of losing the steamer altogether.

Digitized by Google

Proportioning the bearings to the weights and strains they have to carry has also been an improvement, the different bearings of marine engines were usually made alike in surface, irrespective of the work each had to do with a view to economy in construction; in modern practice the after bearings have more surface than the forward, except in cases where heavy slide valve gear has to be supported, so that the wear down in the whole length of the shaft is equal, thus avoiding those alternate bending strains at top and bottom of the stroke every revolution.

Another improvement that has been successfully introduced, adding to the duration of life of crank shafts, is the use of white bearing metal, such as Parson's White Brass, on which the shafts run smoothly with less friction and tendency to heat, so that along with well proportioned surfaces a number of crank shafts in the Peninsular and Oriental Company's service have not required lining up for eight years, and I hope with care may last till new boilers are required.

Large and powerful steamers can be driven full speed from London to Australia and back without having any water on the bearings, using oil of only what is considered a moderate price, allowing the engineer in charge to attend to the economical working of both engines and boilers (as well as many other engines of all kinds now placed on board a large mail and passenger steamer), instead of getting many a drenching with sea water, and worried by close attention to one or two hot bearings all the watch. Compare these results with the following:—"In the same service in 1864, and with no blame to the engineers in charge, the crank shaft bearings of a screw steamer had to be lined up every five days at intermediate Ports; through insufficient bearing surfaces, sea water had continually to be used, resulting in frequent renewal of crank shaft."

Steamers can now run 25,000 miles without having to lift a bearing, except for examination at the end of the voyage. I would note here that the form of the bearings on which the shafts work has also been much improved, they are made more of a *solid character*, the metal being more equally disposed *round* the shaft, and the use of gun metal for the main bearings is now fast disappearing; in large engines the only metals used are cast iron and white brass, an advantage also in reducing the amount of wear on the recess by corrosion and grinding of the cast-iron under brass, where sea water was used, often to a considerable extent.

Digitized by Google

Figures No. 1 and No. 2 show the design of the old and new main bearings, and I think require but little explanation. Most of you present will remember your feelings when, after a hot bearing, the brasses were found to be cracked at top and bottom, and the trouble you had afterwards to keep these brasses in position. Where a smoking hot bearing occurred, say in the heating of a crank pin, it had the effect of damaging the material of the shaft more or less according to its original soundness, generally at the fillets in the angles of the cranks; for when the outer surface of the iron got hot, cold water, often of a low temperature, was suddenly poured on, and the hot iron, previously expanded, was suddenly contracted, setting up strains which, in my opinion, made a small tear transversely where the metal was *solid*, and where, what is termed lamination flaws due to construction, existed; these were extended in their natural direction, and by a repetition of this treatment these flaws became of such a serious character that the shafts had to be condemned or actually gave way at sea. Figures 3, 4, 5, and 6, show these flaws.

The introduction of the Triple Expansion Engine with the three Cranks gave better balance to the shaft, and the forces acting in the path of the crank pin being better divided, caused more regular motion on the shaft, and so to the propeller.

This is specially noticeable in Screw Steamers, and is taken advantage of by placing the cabins further aft, nearer the propeller, the stern having but little vibration; the dull and heavy surging sound due to unequal motion of the shaft in the two crank engines is exchanged for a more regular sound of less extent, and the power formerly wasted in vibrating the stern is utilised in propelling the vessel.

In spite of all these improvements I have mentioned, there remain the serious questions of the defects in the material—due to variety of quality—and the extreme care that has to be exercised in all the stages during construction of crank or other shafts built of iron.

Many shafts have given out at sea and been condemned through no other cause than *original defects* in their construction and material.

The process of welding and forging a crank shaft of large diameter now is to make it up of so many small *pieces*, the *best shafts* being made of what is termed scrap, representing thousands

Digitized by Google

of small pieces of selected iron, such as cuttings of old iron boiler plates, cuttings off forgings, old bolts, horse shoes, angle iron, &c., all welded together, forged into billets, re-heated and rolled into bars; it is then cut into lengths, piled, and formed into slabs of suitable size for welding up into the shaft; no doubt this method is preferable to the old method of "faggoting"—so-called—as the iron bars were placed side by side resembling a bundle of fagots of about 18in. or 20in. square; the result was that while the outside bars would be welded, the inside would be improperly welded, or the hammer being weak, the blow would be insufficient to secure the proper weld, and it was no uncommon thing for a shaft to break and expose the internal bars, shewing them to be quite separate or only partially united, as in Figure 4.

This danger has been much lessened in late years by careful selection of the materials, improved methods of cleaning the scrap, better furnaces, the use of the most suitable fuel, and more powerful steam hammers. Still, with all this care, I think I may say there is not a shaft without flaws or defects more or less, and when these flaws are situated in line of the greatest strains, and though you may not have a hot bearing, they often extend until the shaft becomes unseaworthy.

Figure 4 illustrates section of a shaft that gave way, and found not to be welded about the centre; this shaft was made in 1869. Figure 5 illustrates the section of a shaft made in 1880. You will see this shaft gave way from flaws situated near the outside of the section, the opposite of figure 4; these flaws were not observable when the shafts were new, although carefully inspected; they gradually increased under strain, came to the outside and were detected, having assumed the form as per figure 5. Considerable loss fell upon the owners of these vessels who were in no way to blame, nor could they recover any money from the makers of the shafts, who were alone to blame. I am pleased to state, and some of the members here present know that considerable improvement has been effected in the use of a better material than iron for crank shafts by the introduction of a special mild steel by Messrs. Vickers, Sons and Company, of Sheffield, and that instead of having to record the old familiar defects found in iron shafts, I can safely say no flaws have been observed when new, or during eight years' running, and there are now twenty-two shafts of this mild steel in the P. & O. Company's service.

I may here state that steel was used for crank shafts in this service in 1863, as then manufactured in Prussia by Messrs. Krupp,

Digitized by Google

and generally known as Krupp's Steel, the tensile strength of which was about 40 tons per square inch, and though free from flaws, it was unable to stand the fatigue and broke, giving little warning. It was of too brittle a nature, more resembling chisel steel, which you will see by the fracture as shewn in figure 7, it was broken again under a falling weight of 10cwt. with a 10ft. drop=12 tons.

The mild steel now used was first tried in 1880; it had a tensile strength of 24 to 25 tons per square inch, it was then considered advisable not to exceed this, and err rather on the safe side; this shaft has been in use eight years and no sign of any flaw has been observed. Since then the tensile strength of mild steel has gradually been increased by Messrs. Vickers, the steel still retaining the necessary ductility and toughness to endure fatigue; this has only been arrived at by improvements in the manufacture, and more powerful and better adapted hammers to forge it down from the large ingots to the size required; the amount of work to which they can now subject the steel renders it more fit to sustain the fatigue such as that to be endured by a crank shaft. These ingots of steel can be cast up to 100 tons weight and require powerful machines to deal with them. For shafts, say of 20 inches diameter, the diameter of the ingot would be about 52 inches; this allows sufficient work to be put on the couplings as well as the shaft; to make solid crank shafts of this material, say of 19 inches diameter, the ingot would weight 42 tons, the forging when completed 17 tons, and the finished shaft 11¾ tons, so that you see there is 25 tons wasted before any machining is done, and 5¼ tons between the forging and finished shaft. This makes it very expensive for solid shafts of large size, and it is found better to make what is termed a *built shaft*—the cranks are a little heaver and engine framings necessarily a little wider, a matter comparatively of small moment.

I give you a rough drawing of the hydraulic hammer, or strictly speaking, *press*, used by Messrs. Vickers in forging down the ingots in shafts, guns, or other large work; this hammer can give a squeeze of 3,000 tons. The steel seems to yield under it like tough putty, and unlike the steam hammer, there is no *jarring* on the material, and it is manipulated with the same ease as a small hammer by hydraulics.

The tensile strength of steel used for shafts having increased from 24 to 30 tons, and in some cases 31 tons—considering that this was two tons above that specified, and that we were approaching what may be termed *hard steel*—I proposed to the makers to

Digitized by Google

test this material beyond the usual tests, viz.:—Tensile, extension and cold bending tests; the latter I considered was much too easy for this fine material, as a piece of fair iron will bend cold to a radius of 1½ times its diameter or thickness without fracture, and I proposed a test more resembling the fatigue that a crank shaft has sometimes to stand, and more worthy of this material, and in the event of its standing this successfully, I would pass the material of 30 or 31 tons tensile strength. Messrs. Vickers readily agreed, and I give you a sketch of the apparatus used, viz.:—Figure 9. Specimens of steel used in the shafts were cut off different parts—crank pins and main bearings—(the shafts being built shafts) and roughly planed to 1¼in. square, and about 12 inches long; they were laid on the block as shown, and a cast iron block, fitted with a hammer head half-ton weight, let suddenly fall 12in, the block striking the bar with a blow of about four tons; the steel bar was then turned upside down and the blow repeated, reversing the piece every time until fracture was observed, and the bar ultimately broken. The results were that this steel stood 58 blows before shewing signs of fracture, and was only broken (as shown in fig. 9*a*) after 77 blows; it is noticeable how many blows it stood after fracture.

A bar of good wrought iron undressed, of same dimensions, was tried, and broke the first blow.

A bar cut from a piece of iron to form a large chain, afterwards forged down, and only filed to same dimensions, broke at 25 blows. I was well satisfied with the results, and considered this material, though possessing a high tensile strength, was in every way suitable for the construction and endurance required in crank shafts.

Sheet No. 1 shows you some particulars of these tests. A.

| | Tensile Tons | Elong. in 5in. | Bend. | Fractured blows | Broke blows | Fall |
|---|---|---|---|---|---|---|
| A. = | 30·5 | 28°/₀ | Good | 61 | 78 | 12in. |

In order to test the comparative value of steel of 24¾ up to 35 tons tensile strength, I had several specimens taken from shafts tested in the manner described, which may be called a *fatigue* test; the results are shown on same sheet. B, C, D, E, F, G, H, I.

| | | | | | | |
|---|---|---|---|---|---|---|
| B. | = 24½ | .. | Good | 64 | 72 | 7in. |
| Ditto | = .. | .. | .. | 48 | 54 | 12in. |
| C. | = 27 | 25·9°/₀ | Good | 76 | 81 | 12in. |
| D. | = 29·6 | 28·4°/₀ | Good | 71 | 78 | 12in. |
| E. | = 30·5 | 28·9°/₀ | Good | 58 | 77 | 12in. |
| F. | = 35·5 | 20°/₀ | Good | 80 | 91 | 12in. |

Digitized by Google

The latter was very tough to break. Specimen marked A shews you one of these pieces of steel.

I show you also fresh broken specimens which will give you a good idea of the beautiful quality of this material. These specimens were cut out of shafts made of Steel Company of Scotland's steel. I also show you specimens of cold bending.

| | | | | | | |
|---|---|---|---|---|---|---|
| G. | 30 9 | 27½°/₀ | Good | 59 | 66 | 12in. |
| H. | 29·3 | 30°/₀ | Good | 66 | 90 | 12in. |
| I. | 28·9 | 28·9°/₀ | Good | 53 | 68 | 12in. |

I think all of the above tests show that this material, when carefully made and treated with sufficient mechanical work on forging down from the ingot, is suitable up to 34 tons for crank shafts; how much higher it would be desirable to go is a question of superior excellence in material and manufacture resting with the makers. I would, however, remark that no allowance has been made by the Board of Trade or Lloyd's for the excellence of this material above that of iron.

I was interested to know how the material in the best iron shafts would stand this fatigue test compared with steel, and had some specimens of same dimensions cut out of iron shafts. The following are the results:—

| | | | | | | |
|---|---|---|---|---|---|---|
| J. | 18·6 | 24·3°/₀ | Good | 17 | 18 | 12in. |

Made of best double rolled scrap 4½ cwt. blooms.

| | | | | | | |
|---|---|---|---|---|---|---|
| K. | 22· | 32½°/₀ | Good | 21 | 32 | 12in. |

Best iron, three good qualities, rolled into flat bars, cut and made into 4½ cwt. blooms.

You will see from these results that steel stood this fatigue test 73°/₀ (Vickers) 68°/₀ (Steel Company) better than iron of the best quality for crank shafts, and I am of opinion that so long as we use such material as these for crank shafts, along with the present rules, and give ample *bearing surface*, there will be few broken shafts to record.

I omitted to mention that built shafts both of steel and iron of large diameter, are now in general use, and with the excellent machines and special mechanics, are built up of five separate pieces in such a rigid manner that they possess all the solidity necessary for a crank shaft. The forgings of iron and steel being much smaller, are capable of more careful treatment in the process of manufacture. These shafts, for large Mail Steamers, when

Digitized by Google

coupled up are 35 feet long, and weigh 45 tons. They require to be carefully coupled, some makers finishing the bearings in the lathe, others, depending on the excellence of their work in each piece, finish each complete.

To ensure the correct centring of these large shafts I have had 6in. dia. recesses, ¾in. deep, turned out of each coupling to one guage, and made to fit one disc. Duplicate discs are then fitted in each coupling, and the centring is preserved, and should a spare piece be ever required, there is no trouble to couple correctly on board the steamer. Photograph shows a built shaft in the lathe. Figure 10 shows the recesses and disc.

## PROPELLER SHAFTS.

The Propeller Shaft is generally made of iron, as per figure 11, and if made *not less* than the Board of Trade Rules as regards diameter, of the best iron, and the gun metal liners carefully fitted, they have given little trouble; the principal trouble has arisen from defective fitting of the propeller boss.

This shaft, working in sea water, though running in lignum vitæ bearings, has a considerable wear down at the outer bearings in four or five years, and the shaft gets out of line. This wear has been lessened considerably by fitting the wood so that the grain is end way to the shaft, and, with sufficient bearing surface, these bearings have not required lining up for nine years; it is, however, a shaft that cannot be inspected, except when in dry dock, and has to be disconnected from the propeller and drawn inside for examination at periods suggested by experience. Serious accidents have occurred through want of attention to the examination of this shaft, working in salt water with liners of gunmetal, galvanic action ensues, and extensive corrosion takes place at the ends of the brass liners, more especially if they are faced up at right angles to the shaft—Some engineers have the uncovered part of the shaft between the liners inside the tube protected against the sea water by winding over it tarred line; as this may give out and cause some trouble by stopping the water space, I have not adopted it, and shall be pleased to have the experience of any seagoing engineer on this important matter—A groove round the shaft is formed due to this action, and, in some cases, the shaft has broken inside the stern tube, breaking not only it, but tearing open the hull, resulting in the foundering of the vessel.

Digitized by Google

Steel has been used for screw shafts, but has not been found so suitable, as it corrodes more rapidly in the presence of salt water and gun metal than iron, and unless protected by a solid liner for the most part of its length—a mechanical feat which has not yet been achieved in ordinary construction, as this liner would require to be 20 ft. long. I find it exceedingly difficult to get a liner of only 7 feet long, in one piece, and the majority of 6 ft. liners are fitted *in two pieces;* the joint of the two liners is rarely *water-tight*, and many shafts have been destroyed by this method of fitting these liners. I trust that Engine Builders will make a step further in the fitting of the liners on these shafts, as it is against the interest of the *Shipowner* to keep ships in dry dock from such causes as defective liners, and I think it will be only a matter of time when the screw shaft will be completely protected from sea-water, at least inside the stern tube; when this is done, I would have no hesitation in using steel for screw shafts.

Though an easier forging than a crank shaft, these shafts are often liable to flaws of a very serious character, owing to the contraction of the mass of metal forming the coupling; the outside cooling first, tears the centre open, as per sketch, figure 14, and when there is not much metal to turn off the face of the coupling, it is sometimes undiscovered; having observed several of these cavities, some only when the *last cut* was being taken off, I have considered it advisable to have holes bored in the end and centre of each coupling, as far through as the thickness of the flange; when the shafts are of large size this is sure to find these flaws out. Another flaw, which has, in many cases, proved serious when allowed to extend, is situated immediately abaft the gun-metal liner in front of the propeller, as per figure 12.

This may be induced by corrosion caused by the presence of sea-water, gun-metal, and iron, assisted by the rotation of the shaft. It may also be caused under heavy strain, owing to the over finishing of the shaft at this part under the steam hammer.

The forgemen in these days of competition and low prices are instructed to so finish that there will not be much weight to turn off when completing the shaft in the lathe; this is effected by the use of half-round blocks under the hammer at a lower temperature than the rest of the forging is done, along with the use of a little water flung on from time to time, and it is remarkable how near a forging is in truth when centred in the lathe and how little there is to come off; the effect of this manipulation is to form a hard ring of close grain about one inch thick from the circumference of

Digitized by Google

the shaft inwards. The metal in this ring is much harder than that in the rest of the shaft, and takes all the strain the inner section gives; consequently when strain is brought on either in heavy weather, or should the propeller strike any object at sea or in the Suez Canal, a fracture is caused at the circumference; this, assisted by slight corrosion, has, in my experience, led in the course of four months to a screw shaft being seriously crippled. Fig. 13 shows a section of a screw shaft found to be flawed, and which I had broken under the falling weight of a steam hammer, when its appearance conveyed to me that it was weakened by the treatment I have referred to. I think more material should be left on the forging, and the high finish with a little cold water should be discontinued.

Doing away with the outer bearing in the rudder post is an improvement, provided the bearing in the outer end of screw shaft in the stern tube is sufficiently large; it allows the rudder post to have its own work to do without bringing any strain on the screw shaft, and in the event of the vessel's grounding and striking under the rudder post, the direct effect does not bear on the screw shaft—it also tends to reduce weight at this part, where all the weight is overhung from the stern of the vessel.

Having placed these experiences and remarks before you, I shall be pleased if some of the members will give the Meeting some information on these important shafts that will tend to their duration and efficiency.

---

## MR. A. BELDAM'S REMARKS—*27th May.*

I agree with Mr. Manuel, that for crank shafting, at least, steel is much more reliable than iron; one reason, probably, that scrap iron shafting is not so reliable as it used to be, is that a great deal of steel is used now for ship-building and other purposes, and the scrap steel getting mixed with the iron scrap, makes the welding of these many thousand pieces more uncertain, as it is well-known the welding together of steel is not so reliable as wrought iron, and that, with the greater number of pieces, a great deal of dirt is collected, and which also prevents amalgamation or solidity.

In the case of steel this is quite different, as the steel is run into pigs, and then a sufficient quantity of the pigs is melted, and the whole run into an ingot; the size of the ingot of course is regulated by the weight of shaft required to be forged from the

Digitized by Google

said ingot (allowing for waste). This process, with care, ensures a clean block of steel, on which the forgeman operates and draws down his shaft. It is essential that the greatest care should be taken in securing a sound ingot, for instance, with reliable firms, such as Vickers', of Sheffield, and other good makers. The ingots are watched most carefully by reliable men, and should a report be given out whilst the ingot is cooling down, it is a sure sign that a fracture has taken place by contraction in the ingot; this being so the ingot is condemned, as it is certain a contraction crack cannot be hammered together to ensure thorough amalgamation, and a sound forging.

The risk in the manufacture of crank shafts has been considerably reduced by the introduction of built shafts (thus dispensing with the very heavy ingot and forging). The built shaft, in my opinion, has great advantages over the solid forged shaft, as the parts are forged separately, thus making the forging perfectly reliable. Therefore, having reliable forgings, the building of the shafts depends entirely on nicety of workmanship, the right amount of shrinkage to be allowed, and the parts being bored and turned truly; much has been said about keys in the webs and journals, but in my opinion the whole depends upon the shrinkage, and that, if this is not right, keys are utterly useless. My experience also teaches me that for marine purposes all crank shafts which exceed twelve inches in diameter should be built; and that, if this course were adopted, we should seldom hear of broken crank shafts.

With regard to Mr. Manuel's remarks as to steel being used for propeller shafts, I quite agree that steel would deteriorate more rapidly by the churning action in the tube, and also by the action of the brass liners, unless the shaft was entirely cased over with brass, which is now in first-class work becoming general.

The paper, put before us by the author, reflects the greatest credit upon him, as the many diagrams and specimens of tests put before us shew us the great amount of trouble he has taken in the matter.

---

## MR. A. J. MAGINNIS' REMARKS—*27th May.*

Before making any remarks, I must express the pleasure I have experienced in being present to hear such an interesting and instructive paper, and being, perhaps, amongst one of the first who had to do with the question of the adoption, or rather re-introduction of the built design of crank shaft for large mail steamers,

Digitized by Google

about fifteen years ago, it is interesting to re-call the very considerable doubts and troubles experienced, not only as to the design, but also as to the mere question of whether they ought to be adopted or not, the almost universal design then existing being the well known solid forged type. Messrs. Vickers made out a design, and I think you will agree with me that it reflects great credit on the gentleman (Mr. Horsburgh, Superintending Engineer of the White Star Line) who adopted a design which has since become almost universal for large steamers.

As regards the propeller shafts, my own experience is almost identical with that so clearly put forward by Mr. Manuel, and the difficulty of casing propeller shafts is certainly very great indeed. I may mention two cases which some time ago were fitted under my superintendence in twin screw steamers, of about 2,000 I.H.P., the shafts were not cased with brass but simply left larger in the stern-tube-bearings, which were of white metal (Fenton's); on each end of the bearings were packing glands, and a pipe led from the interior of the bearing to above the water line, so that thick lubricating liquid could be permanently kept pressing into the bearing and thus prevent the water or corrosive action from getting at the bearing proper, and this, I may add, has turned out a complete success, after some years' trial.

---

## MR. BARRINGER'S REMARKS—*27th May.*

With regard to fitting keys into the webs of built cranks, I think that it is very necessary to do so; for, although the webs might never move whilst the shaft is cold, I have known a case where no keys were fitted and where the web did shift on account of a hot journal, but, on cooling down again, firmly gripped the shaft although slightly out of position. As to tail end shafts, I am of opinion that it is bad practice to lap the space between liners, as I have known the lapping to get loose and cause trouble by jambing when drawing in the shaft to line up the bushes. I may also mention I have seen a shaft when the brass liner was fitted in two pieces, where the water had cut into the iron for a distance of 1½ inches all round at the point where the liners butted, although the joint seemed quite close, and it was only discovered when the liner was taken off in order to straighten the shaft which had been bent by a hawser getting foul of the propeller.

Digitized by Google

## MR. A. GIBBS' REMARKS—*27th May.*

I am pleased that Mr. Manuel has come forward and given us such an able Paper; there are only one or two things I should like to say. Mr. Manuel asks us to express our opinion on outer bearings; I, for one, am of opinion that in most cases where they are fitted the vessels would be better without them. Mr. Manuel also referred to forging wrought iron shafts, and hammering them when they were almost cold. I should think there was nothing worse than that; but often a shaft looks a little black when being finished under the hammer, although no doubt the centre of the shaft is very hot. I am rather surprised that Mr. Manuel has not described to us what he considered the best possible way of preventing corrosion taking place on the propeller shafts, just at the forward side of the boss or the large part of the cone. The White Star steamers have a gland arrangement, and when the propeller is taken off, the shaft is as bright as a new shilling. In my opinion propeller shafts covered from end to end with liners and having two or three joints in the stern tube are not a thorough job; and, unless the joints are perfect, the liners between the bearings would be better off, having only the usual amount of liners with the centre of the shaft bare.

When shrinking on liners they are hot, and when put on to the cold shaft they gradually contract, and the contraction takes place from the end of the liner (lengthways) towards the centre of the liners, and this leaves a small space at each end; this space is usually soldered up. I have often found this soldering bad, and pressed as it were a little full of the brass, if liners on a shaft were getting warm this is what would take place, and if the sea-water once gets in between the ends of the liners there is no telling what is taking place, and you cannot inspect it unless you take off the liners which is rather costly.

Steel shafts are worse than iron shafts; on the steel shafts the water acts more like a knife. I approve of the plan Mr. Manuel suggests, viz.—chamferring off the ends of the brass liners as much as possible when the shaft is left bare in the centre.

Some years ago I saw two (12¼ inch diameter) steel propeller shafts fitted, and they were not long in when they broke—one just abaft the after liner and one just forward of the after liner—they looked as if they had been cut through. These shafts were taken to the works and I broke one up to pieces with a ball, after cutting all round the shaft with a cold set, the shaft being placed on two strong supports, having the cut in the centre. When

Digitized by Google

the ball fell for the second time the shaft broke in two, not where the cut was, nor between the supports, but outside the supports. Some of the pieces of this shaft I had drawn out under the hammer to about a quarter-of-an-inch square, and you could bend it about any way. The shafts that had been taken out of the ship and had done good work were only 11¼ in. diameter and made of iron. I would only add there is nothing I would like better than a good steel-built crank shaft, and, when working, to be kept free from sea-water.

---

## MR. D. GREER'S REMARKS—*27th May.*

My remarks will be but brief, and not, I am afraid, of much importance. I have had considerable experience in dealing with tail end shafts and have found that with regard to putting on the brass liners, that it is much the better way to shrink them on; for, although this is probably the more costly method, I always found a better casting and that the liner had a better grip on the shaft.

---

## MR. JAS. ADAMSON'S REMARKS—*27th May.*

I did not wish to rise and speak on this subject to-night, as I have observed several members, whom we cannot expect to be with us very often, taking notes, and whose experience it would be well to hear.

I have proposed to the Chairman that another evening should be set apart for a further discussion on the subject, which has been so well brought before us to-night by Mr. Manuel.

I have no doubt that there are those present who could give an interesting experience in Crank and Propeller, and probably also Intermediate Shafts, not only for the profit of those who are present, but of those of our members who are now tossing on the mighty deep.

Having been called upon by the Chairman, I may remark on one or two cases of Propeller Shafts which have come under my notice, owing to trouble with the brass liners. In one steamer on the homeward run, the whole of the *lignum vitæ* bearing strips were torn out, the shaft was thus running for several days at reduced speed without any bearing in the after end of the stern tube. When the shaft was drawn in dry dock, grooves were found to be cut into the shaft, at the junction of the liners, nearly

Digitized by Google

1 in. deep. In this case the liners were shrunk on in two lengths, the water had entered at the junction of the two pieces and had gradually eaten away the shaft, causing the brass to become slack and leading to the shaft itself being condemned. Soon after this, in another steamer fitted in the same style and about the same age when examined in dry dock, the shaft was found to be gone almost to the same extent and was also condemned, being reduced below the margin of safety.

There is considerable difference of opinion as to the best plan of dealing with the brass liners. I am inclined to think that the method of casting the brass on the shaft is preferable to shrinking the liners on. Great care, of course, must be exercised in the casting, that nothing may enter between the brass and the shaft to prevent the whole being a solid job.

In reference to the proposal of a continued discussion, I would suggest Thursday or Friday next week, as may be convenient.

---

## MR. MANUEL'S REPLY.—*27th May.*

Mr. Beldam has referred to the great care required in the manufacture of Steel Shafts, and to the watchfulness required when cooling, as the steel might give way in the centre with a crack that could be heard. I think, however, that the same thing applies to iron forgings, for the two metals are much alike in this respect. A mass of iron or steel unless gradually and equally cooled down, is likely to give way in the centre, and I do not think that in any way goes against the use of steel; it shows how carefully Mr. Beldam has given his attention to this detail. We are much indebted to Mr. Maginnis for the interesting remarks he has made, and also to the other gentlemen who have spoken.

In regard to water getting between the cast iron of the boss and the propeller shaft, very little trouble would be experienced if the Superintending Engineer, when inspecting these shafts, sees that the boss is a thorough fit on the shaft cone. A plan which I have found very successful, and which I should be inclined to repeat, is:—After the boss had been fitted to the shaft to bore two holes in the boss to the space round the shaft, and fill the space up with tallow; this, if done carefully, prevents the water—even if the shaft was not a very good fit—from getting to the shaft and so prevents corrosion.

Digitized by Google

In regard to Mr. Adamson's proposal that the discussion be continued at the next meeting, I can only repeat what has already been said— the proposal is a good one, as I consider this question a most important one, and one upon which as many as possible should give their experience as well as any suggestions which might tend to the efficiency and endurance of these shafts. We must bear in mind also, that while we are exercising our minds in this direction it is not labour that will be lost, it may be the means of saving life and property. We do not think of this sometimes as we ought; and I am sure if we were to go about our work with these views before us, the skill of Engineers in this and other countries would be the means of saving not only property, but life, and what can we do better? I shall, if possible, endeavour to be present at the next meeting. I have to thank you for the manner in which you have received the Paper, and for the honour you have conferred upon me in electing me a Vice-President of the Institute. Let me add that it shall be my endeavour to do my utmost to promote the best interests of this Institute. Our thanks are due to those gentlemen who have brought us together, and who have succeeded so well in forming this Society of Marine Engineers, following the lines of the Institute of Naval Architects. Here we can discuss many important subjects, the effect of which will not only elevate our minds, but fit us all the better for the discharge of those duties we are called to perform.

---

## CHAIRMAN'S REMARKS—*27th May.*

(Mr. J. McFarlane Gray.)

In rising to propose a vote of thanks to Mr. Manuel for his very interesting paper, I would just like to point out that it is of the utmost importance that we should pay attention to the details of every accident which occurs on board a steamer. The breaking of a shaft is providential in the way of your education as Engineers. Great improvements have been made in shafts. By whom? Not by you; not by seagoing Engineers, so you ought to be grateful to those who have worked out these improvements for you and not be too proud to acknowledge how little you have done towards them. Marine engineers, however, have to do with so much complication of machinery on board the steamship of to-day, that it surprises me that more of them do not lose their heads or become incapable from heart disease while on duty.

We are now, I believe, within measurable distance of getting a steel twice as strong as that now used, and of great utility and cheapness, if there was only the demand for it. I have not been

Digitized by Google

so much amongst the practical part of the work of late years, and therefore, my information is somewhat second-hand, as compared with Mr. Manuel's; but I hope ere long to be able to visit steamers more than I have, and to get out of Engineers all the information they will give me, perhaps more than they think they know themselves.

We will continue the Discussion, as proposed, next week, and no doubt members will receive due notice when the evening is fixed.

I have also to thank you for electing me a Vice-President of the Institute; I take a deep interest in it, and wish it all success.

---

Digitized by Google

# CRANK AND SCREW SHAFTING

IN THE

# MERCANTILE MARINE.

## CHAIRMAN'S OPENING REMARKS—

(MR. JAS. ADAMSON).

*Continued discussion on 6th June.*

In his absence I have been called to occupy the place which, much to his, and I may also say our, regret, our President is unable to take, on account of being called out of town. In order to refresh our memories as to the most noteworthy points in the paper read by Mr. Manuel, who at some personal inconvenience, has kindly come to-night to hear the discussion and reply to what may be enquired—I will give a few of the leading heads, some of which may serve as starting places for discussion and remarks.

Mr. Manuel referred to the difficulty which has frequently been experienced with steamers from the time of leaving the builders' hands, such being indicative of insufficient bearing surface, disproportion of metal in the blocks, or inaccuracy in originally lining off the shafting. As to the original lining off I would briefly refer to a good practice adopted by Mr. Manuel himself, and others, of marking each bearing block and having gauges made, so that at any time it can be seen at glance, how much the shaft has fallen from its original bearing.

I know one steamer of over 1,100 H.P. which has given considerable trouble, both with the main and thrust bearings; the latter especially having very little surface—only one ring =2·1 sq. ft. —required constant attention and a liberal supply of water to keep it working cool; since cutting certain oil grooves in the ring, it has been working better.

Digitized by Google

The introduction of white metal has certainly been an improvement (for bearings) both in respect to the general working and overhauling.

I may instance one case where a serious flaw was developed in the after crank shaft—No. 4 bearing—the time at command being short, in place of fitting the spare or a new shaft, the forward shaft was reversed with the after one so as to bring the flawed bearing forward, thus making it No. 1—fortunately the shafts were reversible. This shaft is still working in this position, and illustrates Mr. Manuel's remark as to the strains on the respective shafts and bearings.

I may mention the case of another steamer which has now been constantly running for over eight years, the main bearings of which have not been touched during that time, and have given no trouble.

The reference made to the very great increase of work and responsibility which have been added to the duties of the Chief Engineer and his juniors, will meet with hearty response from many of those present, as with electric light, refrigerators, hydraulic and other engines, and the modern appliances fitted with the high pressure steam, the engine room of to-day is very different from what it was a few years ago.

The diagrams and samples, which by the kindness of Mr. Manuel, will be allowed to remain for closer inspection in the reading room for a few weeks, indicate the great interest taken by the author of the paper in the Institute and its members. The extra tests to which the steel was subjected are very interesting.

Reference was made to the paper, read by Mr. Milton before the Institute of Naval Architects, in 1881, in the discussion on which a remark made was repeated, and its value questioned by Mr. Manuel, much to the effect that all credit is due to the engine builders, when all goes well with the shafting, and discredit to those who have charge of the working of the shafting when anything goes wrong.

There is a later paper by Mr. Hector McColl, read before the Institution of Engineers and Shipbuilders, in Scotland, session 1886-7, which is very interesting, and full of information, and will amply repay perusal. The questions arising out of built shafts are dealt with, as the shrinking in of the pins, and keying of same.

Digitized by Google

In connection with this, I have seen, recently, one or two small shafts, in which the crank pins were turned up with two different sets of centres, *i.e.*, the centres used for the crank pin proper, being different from the centres used for turning the ends of the pin, which are shrunk into the webs; the object is to save pins or keys, and ensure the crank pins against shifting. The names of the patentees I believe are H. and G. E. Fownes; the London Representative is J. H. Taylor, Fenchurch Avenue.

Regarding the propeller shaft, there was one point, which was hardly touched upon in the discussion last evening, viz., the fitting on of the boss. I know one steamer which has given a great deal of trouble on account of the boss being slack, and having to be fitted further on the shaft and refitted nearly every voyage at considerable expense; in this case my impression is that the boss was never a proper fit on the shaft originally, and the sea water getting in to the badly fitted part, gradually destroyed the cast iron, and rendered a good fit impossible. A new boss was fitted to the spare shaft in the workshop by Messrs Stewart, Blackwall, and since then no trouble has been experienced. I may add the taper of the cone in this case was ⅔rds in. to the foot, the metal of the boss had not been destroyed by over-heating in trying to get it off; it usually came off too easily.

---

## MR. SHOREY'S REMARKS—*6th June.*

I should like to ask Mr. Manuel a few questions with regard to fig. 13, which represents section of a broken shaft; and which, he informs us, was broken owing to extra finishing under the steam-hammer, also the use of water during the process.

Having witnessed the forging of several large shafts, also having had the job of turning some of them up, I cannot say that in my experience I have found that the outside of such became contracted and closer grained, through the small quantity of water used in finishing off the forging.

I was always, and still am, under the impression, that the little water thrown on the forging, when finishing, was to cause the scale to become loose and flake, so that it could be swept off with a broom and thus prevent such scale from flying off into the workmen's faces.

Digitized by Google

It also appears to me that the outside could not become so cooled as stated by Mr. Manuel in his paper; as on such a mass of heated metal, the outside would almost immediately become the same temperature as the other heated part.

When turning these shafts in the lathe, one has not found any perceptible difference in the grain, after the first roughing cut has been taken off, although in some instances a good bit has had to come off; yet, apparently, no difference in the grain could be seen between the first and last cut.

---

## MR. D. GREER'S REMARKS.—*6th June.*

I cannot quite agree with Mr. Manuel's theory that the water thrown upon the shaft in process of forging had anything to do with the crystallization and corrosion near the surface of the shaft—section of which is represented on the diagram. It is my opinion that the deterioration so frequently found between the propeller boss and after end of the liner, is due solely to galvanic action, combined with the continuous vibration and consequent strain on this part of the shaft. I would ask Mr. Manuel, one or two questions in reference to this part of his paper:—

Are we to consider that the failure of the shaft in question was due to the extra finish put on it by the forgeman?

Is there not another cause to which the failure of this shaft may be attributed?

Why should the process of extra finish put on the shaft by the forgeman in order to make a smooth job, be looked upon as hurtful to the shaft?

I may say I have seen one shaft lately which had been broken right off at this part by a barge striking the propeller, and that the broken part looked just like cast iron, and in this particular case the surface was corroded slightly, probably less than $\frac{1}{8}$ in. all round. In speaking of built crank shafts, I agree that if they are properly proportioned, webs strong enough, and properly fitted, there is not much danger of their ever getting slack, but at the same time it is a fact that some crank pins have become slack in the crank, as referred to at the discussion on the previous evening.

Digitized by Google

## MR. RUTHVEN'S REMARKS—*6th June.*

With regard to iron shafts and the process of finishing the surface known as "smithed," to show that it had some merits, I knew of a case where in a line of 7 in. shafting of ordinary make, a new length was supplied, turned out of a larger old shaft,so that nothing but the central portion was retained; it was left about 8 in. dia., on a short voyage the new 8 in. part broke. I conclude from this that the "smithed" portion of the old 7 in. shaft was of some use.

Again, referring to the faulty parts within a coupling, the inference is that the hammer which was heavy enough for the main portions of the shaft, was too light for the extra diam. at couplings. I would suggest that as built crank shafts are so successful, built couplings would give a good result. Regarding the breaking of shafts, that must be expected after a number of reversals of the engine has taken place, especially when done suddenly. I would suggest that a record be kept of the number of times the engine has been reversed, so that with a shaft of known material it might be condemned when its life was up, as is done with heavy ordnance.

If this were done and understood by Navigating Officers, they would know that when many and sudden reversals were made necessary, the life of the shaft was being quickly used up.

---

## MR. W. W. WILSON'S REMARKS—*6th June.*

With regard to the opening remarks by the Chairman in which mention was made of a slack propeller, might I ask if in taking it off at first it had to be fired, as that probably might be the cause of it getting slack? For I am of opinion that if it is necessary to fire a propeller and get it off, the tendency is to alter the shape, and consequently the boss would, in a manner of speaking, require to be refitted on the shaft to make a good sound job. Of course I understand that it is only in extreme cases that firing is resorted to, and as I may infer from the chairman's remark, the fault in the case cited, does not seem to be attributable to this cause; it may have arisen from defective fitting originally, or a bad taper on the cone.

Digitized by Google

## MR. J. H. THOMSON'S REMARKS.—*6th June.*

It is very many years ago since Built Crank Shafts were introduced. I remember the trouble there used to be in the paddle ships with the crank pins getting loose, and I would like to ask if any of the members present have had any similar experience with the modern style of built shafts in screw steamers, or whether the present system and superior workmanship have reduced the liability to get loose; the only instance I noted was that given and referred to by Mr. Barringer at the previous meeting, of a crank having moved three quarters of an inch on the circumference of the shaft.

In reference to the advisability of keying on the webs, or depending entirely on shrinkage, regarding which there seems considerable diversity of opinion, I observe in the paper by Mr. McColl, copy of which has been handed to me by Mr. Adamson, there are several paragraphs dealing with this part of the subject, and as they are *a propos* of what has been touched upon, with your permission I cannot do better than read them.

> "The allowance for shrinking should be about one-thousandth of the diameter in steel cranks, but possibly more might be required in those made of iron; this amount of shrinkage will hold well without over straining either the eye or the shaft.

> "Some prefer not to key the crank on the shaft, but as it is quite possible for the heat from a warm pin to pass through the webs and slacken them on the shaft it is necessary that they be keyed, and a good plan of doing so is to bore one or two holes longitudinally along the junction of shaft and crank, and to drive in well-fitted steel pins."

Before sitting down I would like to say that when I see so many present whose experience I know to be considerable, and who have not so many opportunities of letting their voices be heard at our meetings together on account of their absence on the sea, I hope some, at least, will give the benefit of their opinions, in addition to the pleasure they have already given in showing their appreciation of the Institute and its objects by their presence to-night.

Digitized by Google

## MR. J. STEWART'S REMARKS—*6th June.*

I was unfortunate in not being present at the last meeting to hear the paper read by Mr. Manuel, and therefore any observations I may have to make are suggested to me by the remarks of the other speakers this evening.

Referring to a case mentioned by the Chairman, in which trouble had been caused by the repeated loosening and necessary refitting of a propeller boss on the shaft, it would be interesting to know what amount of taper there was on this shaft, for this is a matter of some importance. Cases have come under my notice in which continued trouble was caused by the boss working slightly forward on to the shaft, and consequently getting slack, necessitating repeated tightening up of the nut. The taper in these instances was about half-an-inch to the foot, and that it was insufficient, is proved by the fact that since the taper was increased no such trouble has been experienced, and as far as I am aware, the taper about an inch to the foot has always proved satisfactory.

One of the wall diagrams of a propeller shaft, Fig. 11, with linings at the bearings only—suggests to me the question of lining the whole of the shaft inside the stern tube, as is now customary with some builders. The two systems have each their advantages and disadvantages, and I should like if Mr. Manuel would give us the benefit of his opinion aad experience in the matter.

---

## MR. J. SIMPSON'S REMARKS—*6th June.*

Referring to the question of the propeller boss being a good or a bad fit on the cone of the shaft, I know one Firm which has an excellent method of dealing with all their propellers. There is a mandril to which each boss is fitted and the shafts are accurately made to suit this mandril—where the steamers are all about the same dimensions or power—so that when a new shaft or boss is required, the mandril is always available for obtaining the dimensions as nearly as may be, and very much more accurately than by templets, the work of fitting the boss on the shaft cone itself, which is frequently a too hurried job in order to save time in Dry Dock, is thus minimised and more likely to be a good fit.

Digitized by Google

## MR. MANUEL'S REPLY, *6th June*, 1889.

Mr. Adamson—after bringing before you some of the leading points in my Paper, read at the former Meeting—refers in concluding his remarks, to the necessity of carefully fitting the cone of the boss and shaft, in order to prevent damage and vexatious delays in dry docks—refitting where this kind of work cannot be so well done as in a factory—and this is getting daily more important, for steamers to pay now, have to be kept constantly at work.

With regard to the taper of the core being $\frac{2}{3}$rd of an inch to the foot, $\frac{5}{8}$ths of an inch is the general practice; less taper may do, but the propeller having to be disconnected periodically, the taper should have both holding and disconnecting properties.

In reply to Mr. Shorey's remarks as to the damage done to the material of iron shafts by over finishing at the forge under the steam hammer and the use of water, to give a clean and true forging for the purpose of keeping down the weight, and reduce the time occupied in machining; I may again state, that this finishing being done at a lower heat than when forging the shaft, and the blows given affecting only the material next circumference, as shewn by a ring of fine grained metal in fig. No. 13, about an inch-and-half thick round the circumference; whereas the larger and central part has the grain or crystals so large, extending from that ring to the centre, the result of such a marked inequality of the material must affect the strength of the shaft when under strain, the harder parts getting—through their unyeilding nature—more strain than they can bear on the small area of ring, thus causing fracture at the circumference, and when this is begun it is only a question of time before the shaft gives way.

I would illustrate this by a small sketch which represents what I witnessed while testing steel under strain, to discover the cause why a punched hole damaged steel plates, reducing their strength as compared with drilled holes 30°/₀, at the same time its strength was restored by annealing the plate after punching, shewing that the material had not been torn by the punch.

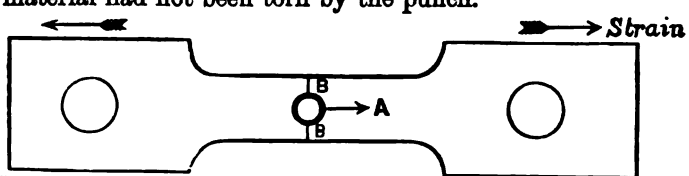


A I found was a ring of metal hardened by compression of the punch, varying in its depth according to the thickness of the plate. When the testing strain was put on the specimen in the machine,

Digitized by Google

the softer and more ductile metal marked B outside of the hard ring A stretched; ring A held on, got the strain, and was fractured, the specimen therefore failed 30 per cent. below what it would have stood if the hole was drilled and no hard ring. The remedy was found in annealing, but it would be difficult to anneal a long shaft and I have never heard of such being done.

As regards the use of the water it seems to reduce the temperature during the operation of finishing more than removing scale, for the latter has been mostly removed beforehand when forging, the close grained ring was caused by the hammer when finishing, the hardening was increased by the water temperature.

The remedy for this: make the forgings rough, but straight and fair, leave ¾ in. to turn off at this part, avoid finishing to within ⅛ of an inch; a shaft to stand fatigue well should be homogeneous throughout. I have to state that the water alone would not cause the ring of close grained iron as shewn in fig. 13, and replying further to Mr. Greer's queries 1, 2 and 3, I have to state:—

Query 1. I do think that the fracture in this shaft was caused by this thin hard ring giving way at sea when under strain.

Query 2. I do not know of any other cause to alter the material as shewn; the shaft was large for the work, considerably above the Board of Trade Rules, and on examination was solid and free from dirt or lamination flaws. The fracture commenced at right angles to the shaft line on the circumference.

Query 3. I think my previous explanation answers this along with the sketch fig. 13, the ring of hard iron, insufficient for the whole strain, first fractures, the result is the whole shaft goes in time.

The remarks of Mr. Ruthven bear out my opinion as to the existence of inequality of material in shafts, the extent of which varies with the diameter and treatment the shaft receives; with regard to the cavity in the forging as shewn in a coupling fig. 14; this was not caused by want of power in the steam hammer but by contraction while cooling, similar to that referred to in Mr. Beldam's remarks on steel ingots.

In regard to the alternate strains brought on crank and other shafts by stopping and starting the engines suddenly, they no doubt in the end weaken the shafts, more especially iron shafts, where flaws and laminations exist; but I do not think it would do to lay down a hard and fast rule for the navigating officer, who on many occasions must act quickly and prevent collisions, &c. The engineer in charge must handle the engines with discretion, and with the powerful appliances he now has, he has time to do this quickly, at the same time cautiously.

Digitized by Google

Mr Wilson calls our attention to the risk of alteration of the bore in a propeller boss by heating it in order to disconnect it from the shaft. When this is carefully done, I may say I have found no perceptible difference in the bore, the small movement that is required to break contact of the surfaces is but little; the danger in this operation arises mostly from the sudden cooling of the boss, causing its fracture.

Mr. Thompson reminds us of the trouble in earlier times through the crank pins getting loose, but the appliances then existing and the want of special care in the fitting and in the choice of material in some measure accounted for this.

Very great care is taken in procuring machines to turn the shafts perfectly true, and to bore out the eye of the crank, which is more difficult to do truly, but after boring, the bore is scraped up perfectly true to a gauge, so that when heated and shrunk on to the shaft, it bears equally all over.

In eight years' experience with built steel shafts, I am pleased to say I have not found one slack or any signs of it.

Mr. Stewart raises the question of propeller bosses getting slack on the screw shaft owing to insufficient taper. I cannot say this has been my experience, the usual taper of screw shaft cone is $\frac{5}{8}$ths of an in. to the foot and if a good fit and plenty of bearing surface in the boss there is little chance of the screw getting slack, want of bearing surface, especially in the forward end of the boss, where the greatest strain comes, has in my experience led to the boss getting slack on the shaft when there has been too much of the metal cored out in order to give ease in fitting.

Lining the screw shaft all over with a solid liner would be an advantage, providing the engine makers would do this satisfactorily. I have seen much trouble caused and unnecessary expense by the careless fitting of the short liners we now have—the effects of hurried work, one of the greatest troubles sea-going Engineers have to contend with in these days of competition.

I heartily agree with Mr. Simpson's remarks as to the use of a mandril or duplicate of the cone of screw shaft in trueing up the bore of a propeller boss; if this is done and the boss carefully fitted to the shaft afterwards, there is no fear of it getting slack.

In conclusion I have to thank the different gentlemen who have taken part in the discussion of my paper, and for the practical and complete manner they have done so. I trust many such papers will be read and discussed here, for they will tend to advance the art of the Marine Engineer and the proficiency of the Merchant Service.

Digitized by Google

Digitized by Google

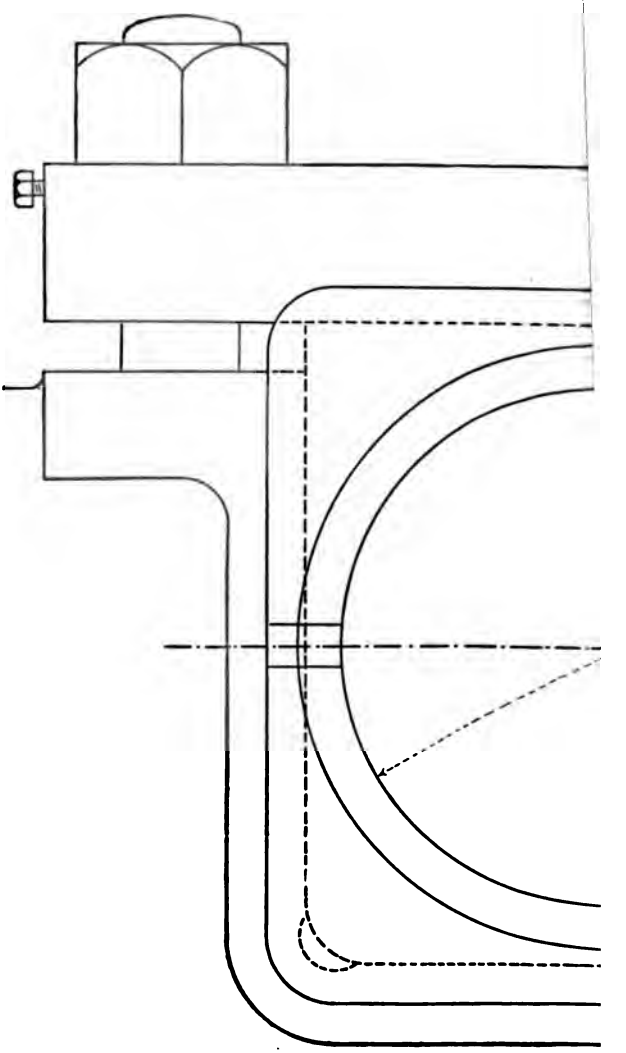

Digitized by Google

RE 1.

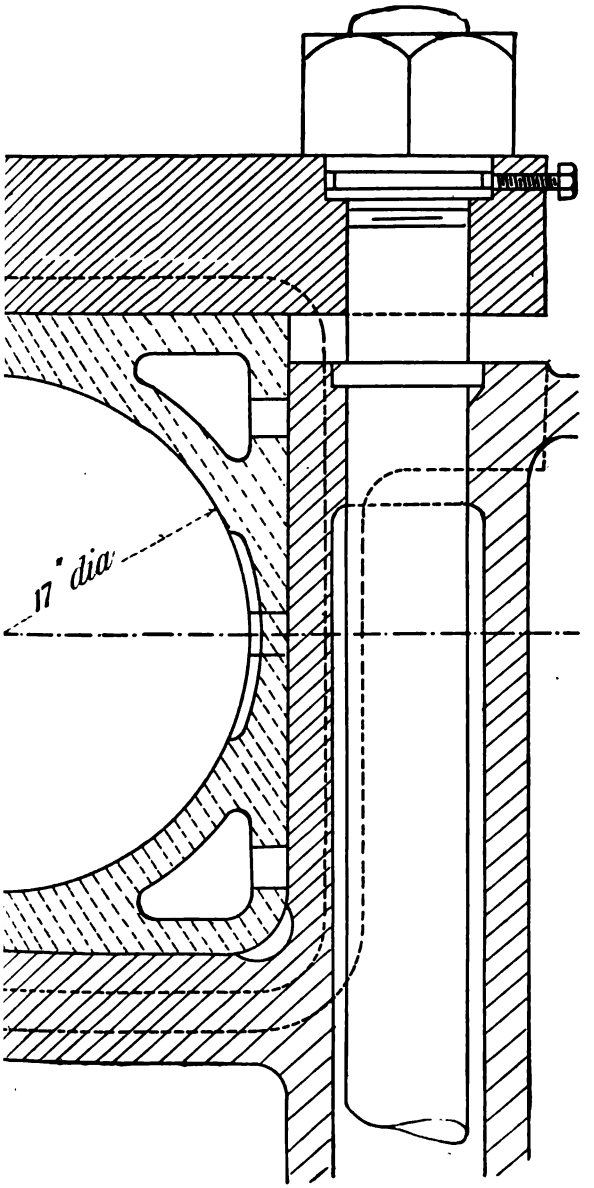


Digitized by Google

Fic

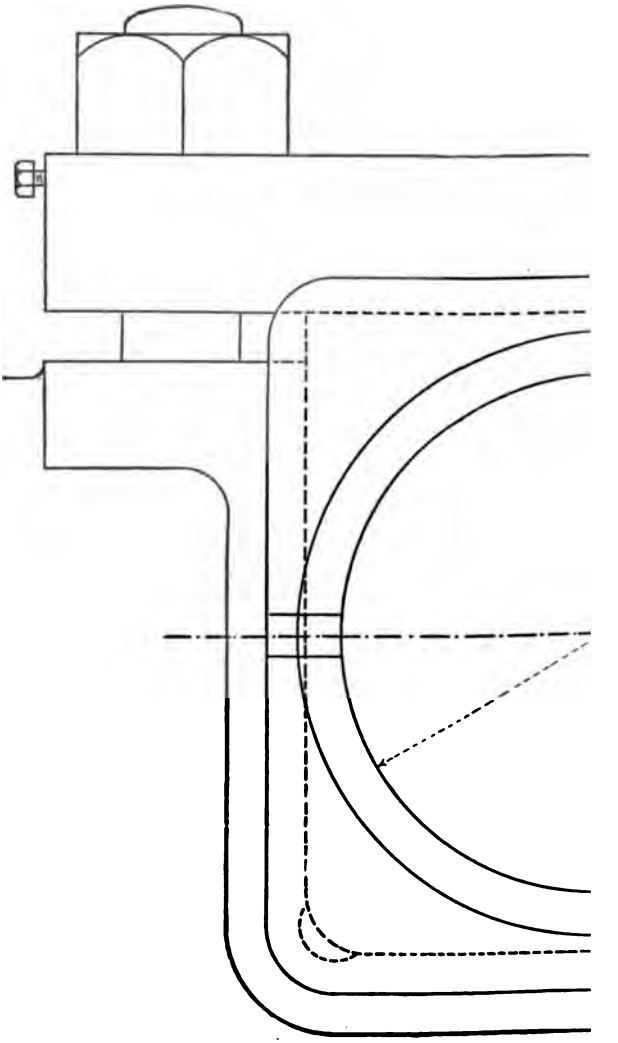

Digitized by Google

FIGURE 1.

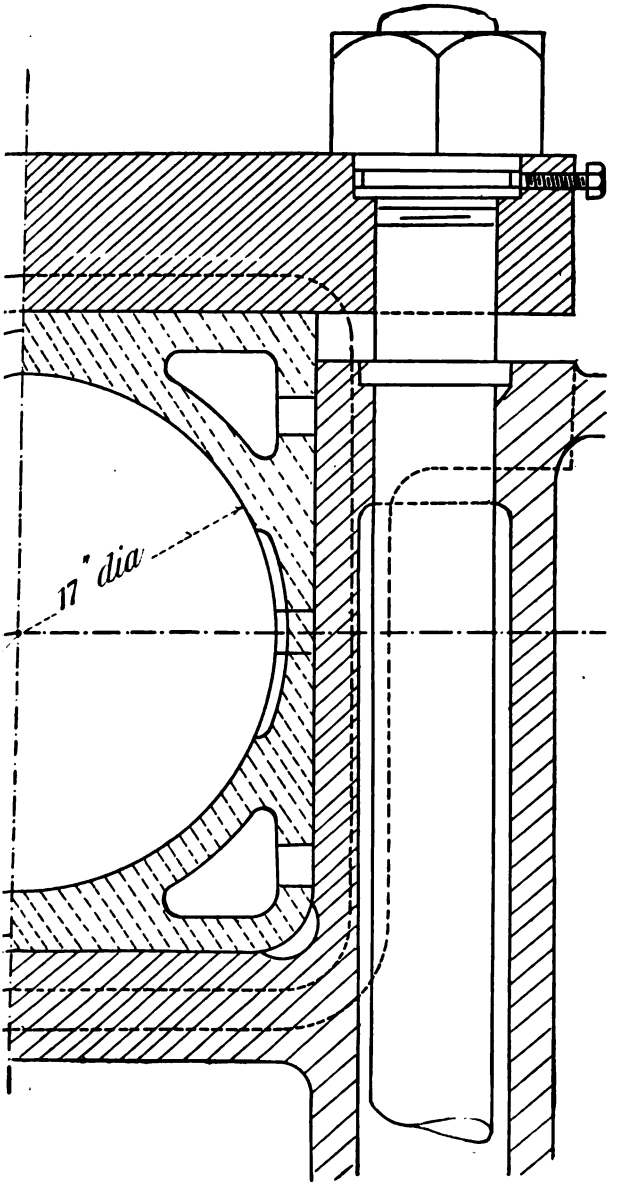


Digitized by Google

Digitized by Google

Digitized by Google

FIGUR

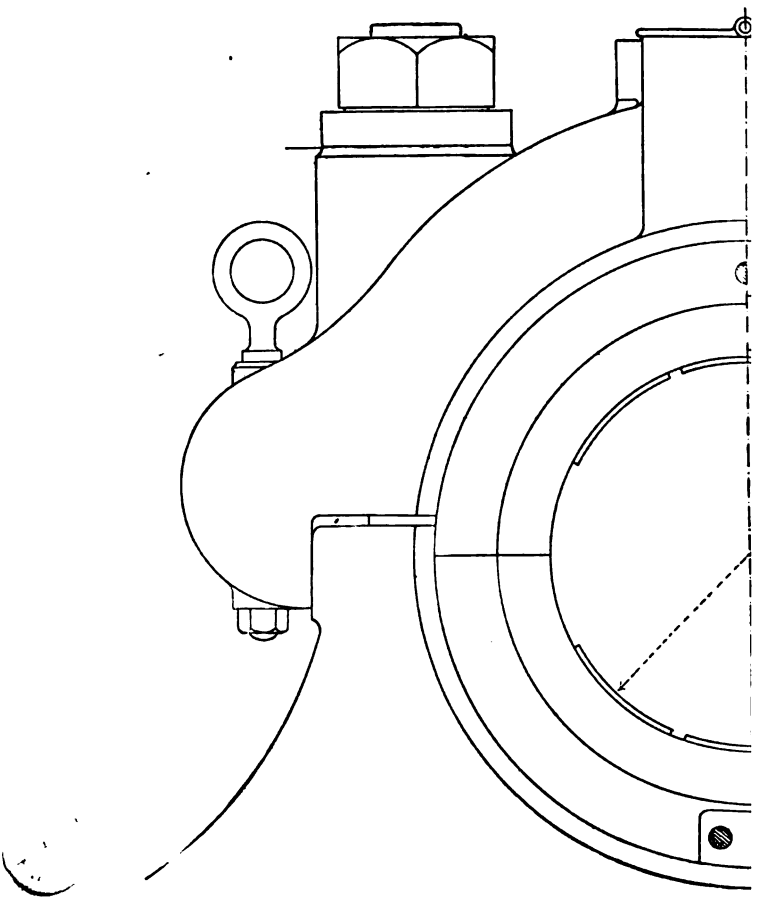

Digitized by Google

FIGURE 2.

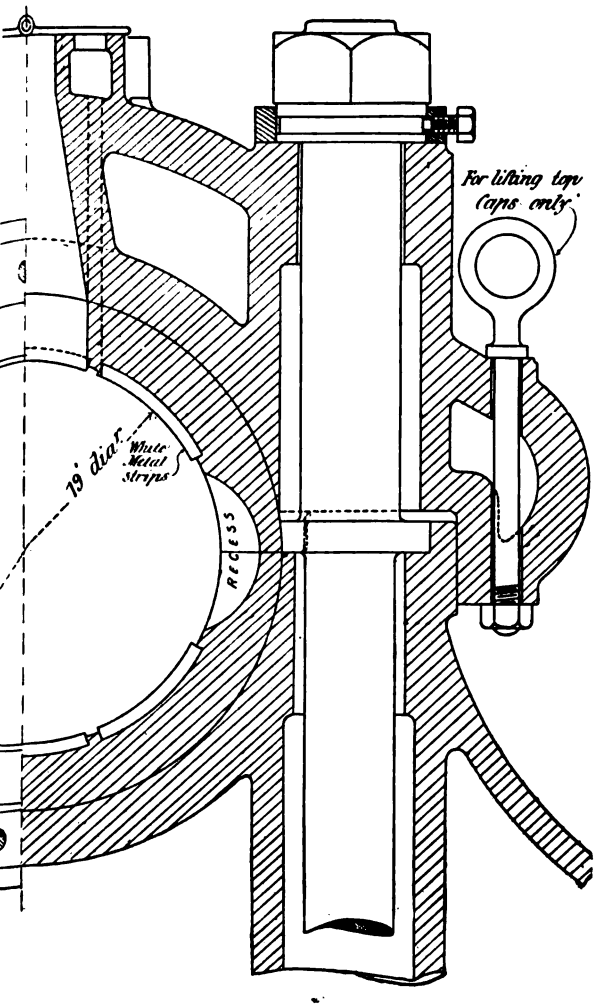


Digitized by Google

Digitized by Google

Fig. 6.

Figure 3.

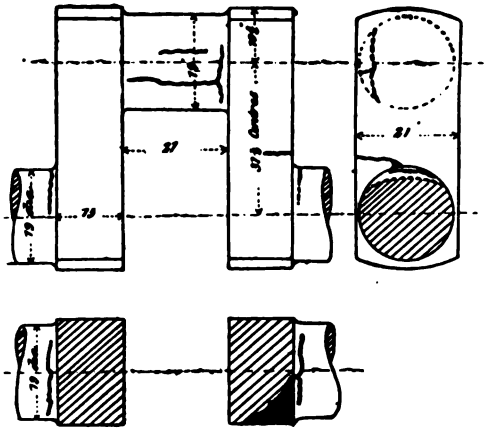

Digitized by Google

UNIV. OF MICH.

Digitized by Google

Digitized by Google

Fig

UNIV. OF MICH.

Digitized by Google

'IGURE 4.

Digitized by Google

UNIVERSITY OF MICHIGAN

Digitized by Google

FIGURE 5.

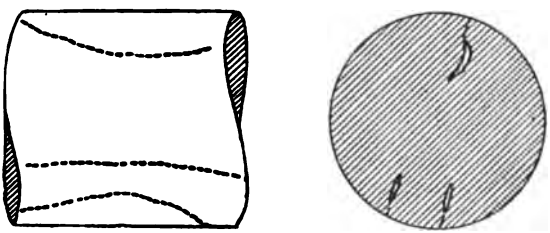

Digitized by Google

UNIV. OF MICH.

Digitized by Google

Digitized by Google

Fig

Digitized by Google

FIGURE 7.

Digitized by Google

Digitized by Google

Digitized by Google

FIGURE

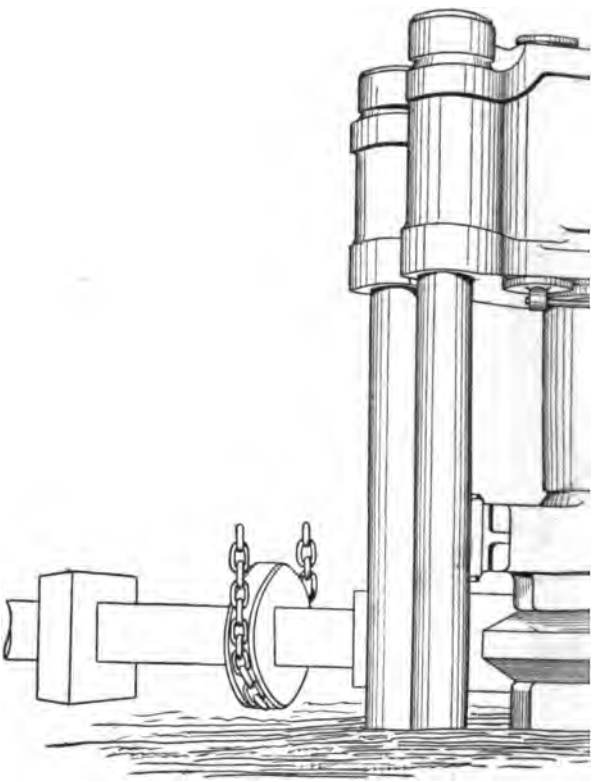

Digitized by Google

8.

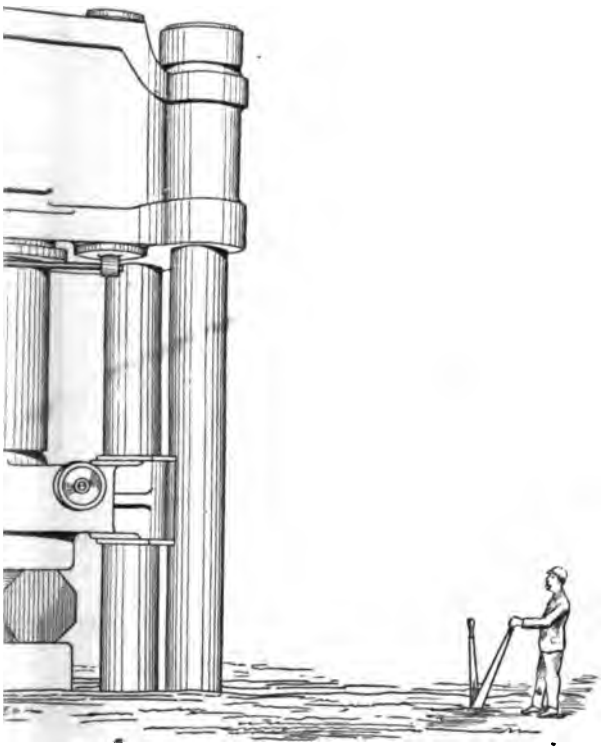

Digitized by Google

Digitized by Google

Digitized by Google

FIGURE 9.

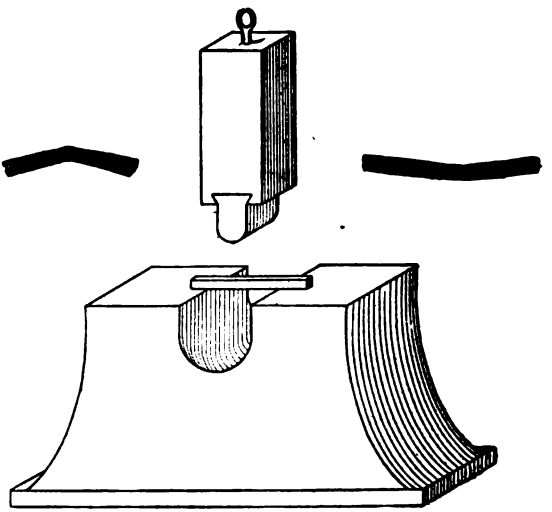

Digitized by Google

FIGURE 9A.

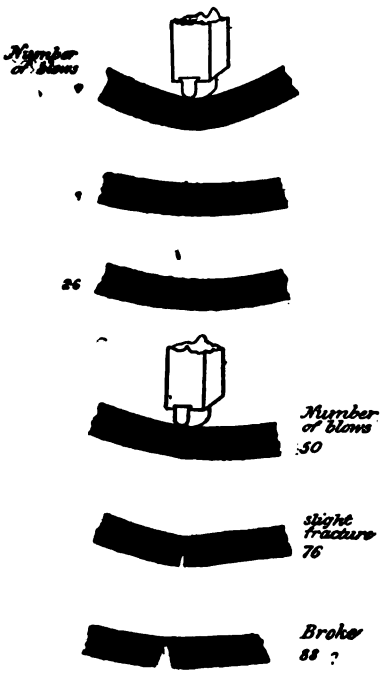


Digitized by Google

UNIV. OF MICH.

Digitized by Google

FIGURE 10.

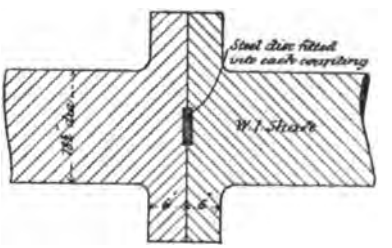


Digitized by Google

UNIV. OF MICH.

Digitized by Google

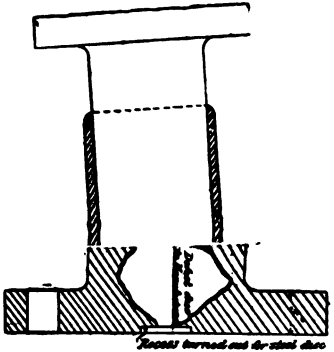

Recess turned out for steel disc

Digitized by Google

UNIV.

Digitized by Google

FIGURE 12.

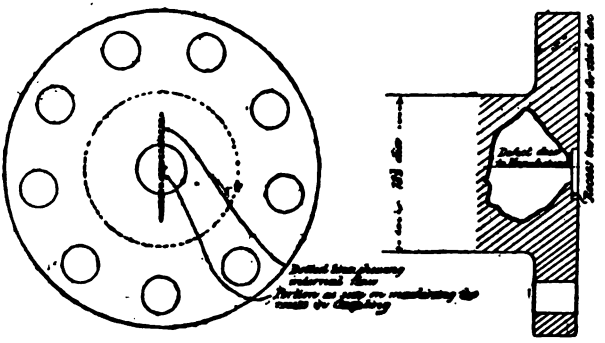

Digitized by Google

UNIV. OF MICH.

Digitized by Google

FIGURE 13.

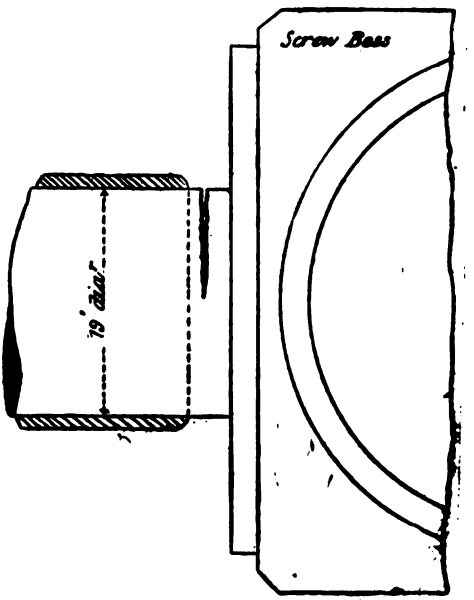


Digitized by Google

UNIV. OF MICH.

Digitized by Google

FIGURE 14.

Digitized by Google

UNIV OF MICH

Digitized by Google

# FOURTH PAPER

(OF TRANSACTIONS)

ON THE

## CHARACTERISTICS OF HANDIWORK

ENTITLED

# "SCIENTIFIC TRI-UNITIES,"

READ AT

*The Opening of the Winter Session, 2nd September,* 1889,

BY

MR. WILLIAM J. CRAIG

(VICE-PRESIDENT).

Digitized by Google

UNIV. OF MICH.

Digitized by Google

THE LANGTHORNE ROOMS,

15 & 17, BROADWAY,

STRATFORD,

*September 2nd*, 1889.

A Meeting of the INSTITUTE OF MARINE ENGINEERS was held here this evening at 8 o'clock, presided over by Mr. F. W. WYMER.

Mr. W. J. CRAIG read a paper entitled "*Scientific Tri-Unities*," specially for Junior Members, to whom the following pages are commended as illustrating the interest taken in their welfare, and at the same time affording mental food, which, if well digested, will result in much increase of intellectual power.

It is well to have a recreation study, apart from the study of Mechanical and Engineering Science, and one chosen from amongst those which have been referred to by Mr. Craig, will amply repay any time and attention devoted to it.

The advantages afforded by the Institute to its members are many, and these we hope to see extended and added to month by month. Any volume not in the library, considered to be a desirable addition, will be added on a request being made in writing by two members, if not at once, as soon as the funds admit.

The reading-room and library are open every evening from 5—10 for the use of members and friends introduced.

Each member should enter his home address in the roll book as soon as convenient, if not already entered.

Several experiments have been made with samples of coal on occasional evenings with the testing machine presented to the Institute by Mr. McFarlane Gray.

The General Business Meeting will be held on Friday, Nov. 1st, at 7 p.m.

JAS. ADAMSON,

*Hon. Secretary.*

Digitized by Google

Digitized by Google

# "SCIENTIFIC TRI-UNITIES."

About the date of the paper read last session on "Pressure" by Mr. McFarlane Gray, the Council of this Institute were exercising themselves very much about how to make the Institute serviceable and attractive to young men graduating in the trade and profession of Engineering.

This was not an outlying detail that happened (as it were) to fall within the scope of a general scheme, but was always considered a main essential feature in the formation of the Institute, and as such was fully set forth in the Preliminary Circular and took a prominent place in the formulation of the "Articles of Constitution" now happily ratified. The Institute has been registered with the approval of the Council of the Board of Trade; the Certificate is granted by them as to a constitutional and commendable scheme, *it is* therefore worthy of your best support to make it a *power* and a *success*.

At this time also the Council was cheered and encouraged, not only by the sympathy of gentlemen in the front ranks of the engineering profession, but also by their practical interest and solid work. You have seen this exemplified in the cases of those who have occupied the chair, of those who have stood *here* before me, as well as of those on the present Session's Syllabus, whom we have yet to hear. I hope more will yet come and prove in this way that they are not of the *sign-post class* "who show the way but do not go themselves," thus encouraging us by their help in that which is already marking the progress of the Institute, giving it a high character, and maintaining the Standard of its literature.

Referring you back to the time already indicated, those who had the pleasure of hearing Mr. J. McFarlane Gray's paper (the reason I refer specially to it is because his remarks are mainly responsible for suggesting the ideas in this paper) will

Digitized by Google

doubtless remember his closing remarks addressed (as this paper is) to our young men, in which he favoured us with some of his own early experiences, and an account of the episodes which marked the turning-points of his career, and came pretty close down to some of our own experiences.

These episodes suggested something besides the moral that was so pointedly drawn from them by the speaker. What did they suggest to us? and to you Graduates particularly? Was it not something like this; that handiwork qualified by application won for him his first distinction in the shop, so "*his*" handiwork must have had special characteristics differing from and superior to that of his shop-mates. Therefore handiwork HAS characteristics, and in merely removing this axiom from a particular case to the status of a general principle, I think it will be equally obvious and acceptable to you all.

The questions—What are the "Characteristics of handiwork, and how are they shown in practice?" are at the foundation of the present paper, and I thought would be suitable to our young men for working out.

The title "Tri-unities" as the result of building on this foundation may or may not be justified; it will explain itself presently. There are details passing daily before you which you have only to collect and arrange in the form of an interesting paper; such having been my aim, I trust to have your forbearance if I fail to put the result before you intelligently.

The "characteristics of handiwork," I should say are the singular qualities exhibited in the finished product of a person's labour or manufacture, which distinguish it from that of other persons, and accordingly give it a distinctive character that is observed to be peculiar to that person's workmanship. The characteristic thus has origin in individuality and owes its formation to some principal feature, some powerful phase of disposition or constitution, something predominating that exercises a ruling tendency over physical and mechanical operations and impresses its stamp on these, conferring a distinguishing mark or qualification on everything done and particularly obvious on anything *made* or *operated upon.*

To illustrate this take as example a person's writing. You are all well aware of the wide dissimilarities that distinguish the art of caligraphy, and though in common daily practice to the extent almost of universality you will scarcely find two who write alike, it is in this and such as this that we find a proof of our deductions on this subject. In his writing it is marked or recorded by each one

Digitized by Google

in his own particular manner, which to others acquainted with him—observant of his style and peculiarities, or his way of executing his work—becomes as it were a sort of trade mark of individuality by which he is known and identified by them even when he is not present. It grows into a natural connection with him in their minds, and thus becomes disseminated through them to others who have never seen him; his writing, productions or work is recognised by them as his and inseparably connected with his name, perhaps long after he has ceased to exist, according to the merit or excellence of his characteristics.

Notable examples will readily occur to you in the names of Burns, Shakespeare and Bunyan in the Literary world, Newton and Galileo in the Scientific world, Trevithick, Newcomen and Watt in our own profession, with Caxton, Rowland Hill, and a host of others made immortal by the "characteristics of their handiwork."

Other instances we have in which the handiwork of an expert workman bears his impress so clearly as to be unmistakable, even for centuries; such we find in cathedrals or great national edifices, extending even to the perishable work of artists, as the paintings of an Angelo, or the still more familiar instance of the violins of Stradivarius; these by virtue of their excellence of handiwork are valued at a King's ransom now-a-days.

This same principle we find extensively in our daily surroundings as a manufacturing and commercial people, depending for our existence upon the work of our hands, and desiring to profit by the result. In the case of a speciality, which we find associated with a name, or firm, for the purpose of identifying or particularizing it among others, the object is to reap the benefit of a particular handiwork, and we see its exclusive character fully developed, when in addition it is placed under protection of our *Patent Laws*, which were framed for the very purpose of securing to individuals the benefits accruing from their own handiwork, having special characteristics entitling it to claim a place there. *As a result of all this we are flooded with proofs that handiwork has characteristics, and that we would do well to cultivate them.* I will illustrate this in a way you will readily understand, viz:—It is quite common to hear remarks indicative of the characteristics of different Firm's Engines, so also of valve-gear, feed heater, forced draught system, pumps, and so on; each recognised by make, arrangement, or other peculiarities, extending even to the minutest details; there are many other instances of ordinary occurrence.—A visit of congratulation to a familiar member on his arrival, or on his promotion to a greater I.H.P., or better still, his new steamer, as

Digitized by Google

affording more scope for friendly critisisms in the character of the fittings and construction. As you walk round the platform, a peep under a lifted cover reveals a "Buckley's Piston," the presence of which does not surprise you, and its merits engages you both colloquially until a recognition of another familiar arrangement facing you in a snug, airy corner of the casing all by itself changes the subject to a mutual approval of the "Maginnis' Steering Gear and Engine."—A look into the well appointed store room; and you notice with satisfaction everything in order and in its place, with spare gear, accessible and available for instant service; in doing so, you observe a regularly graduated series of corrugated discs outlined against the bulkhead, and you are at once aware the engine is fitted with "Beldam's Metallic Valves," and picking up a scrap cutting of material from the locker as you emerge into the better light of the engine-room sky-light, you recognise the same Firm's "Metallic Packing."

These are only several illustrations of the recognition of handiwork, by and through its characteristics, and these I have selected from many we are pleased to find within the family circle of our membership.

As to the commercial and financial value of special characteristics, I cannot prove this better than by reading an extract from the *Evening News and Post* of this date, published only a few hours ago, and referring to the value of "Patents," as follows:—

EVENING NEWS AND POST *of Monday, 2nd September.*

## PATENTS.

A FEW FACTS AS TO THE ENORMOUS WEALTH THERE IS IN THEM.

The Government Commissioner of Patents estimates "that from six to seven-eights of the entire manufacturing capital of the United States, or six thousand millions of dollars (£120,000,000 sterling) is directly or indirectly based upon Patents." A calculation of the same kind in this country reveals a still more surprising result, the capital invested being enormous. It has been computed that Siemen's inventions have produced more than five millions sterling, and have indirectly benefited the poor of this country largely, by creating new industries, or by reviving flagging ones.

Lord Brougham often said that he would gladly have exchanged his honours and emoluments for the profits and renown of the inventor of the perambulator er sewing machine.

Howe, the originator of this invention, derived the princely fortune of £100,000 a year from it, and, from their mechanical improvements, the celebrated Wheeler and Wilson are reputed to have divided for many years an income of £200,000; while the author of the Singer sewing machine left at his decease nearly £3,000,000 sterling. "More money," says a well-known writer, "has been and always can be made out of patented inventions than by any other investment or occupation." The telephone, the planing machine, and the rubber patents realised many millions, while the simple idea of heating the blast in iron smelting increased the wealth of the country by hundreds of millions. The patent for making the lower end of

Digitized by Google

candles taper instead of parallel, so as to more easily fit the socket, made the present enormous business of a well-known firm of London chandlers. The "Drive Well" was an idea of Colonel Green, whose troops during the war were in want of water. He conceived the notion of driving a two-inch tube into the ground until water was reached and then attaching a pump. This simple contrivance was patented, and the tens of thousands of farmers who have adopted it, have been obliged to pay him a royalty, estimated at £600,000. A large fortune was realised by the inventor who patented the idea of making umbrellas out of alpaca instead of gingham, and the patentee of the improved "Paragon Frame" (Samuel Fox) lately left by will £170,000 out of the profits of the invention.

I now come to the second section of the subject, having defined what the "characteristics of handiwork" are, we will now consider how they are shewn, made apparent, or applied, in science and practice.

In looking up all the highest authorities, modern, mediæval and ancient, as in courtesy to you and in duty to my subject I was bound to do with the utmost care, for the best and most pertinent illustrations in confirmation of the principles involved in the subject, or aids to its better understanding, I found, much to my surprise, that they were so numerous and abounding, and had such an enormous scope that I was made to feel at this stage of the preparation of the paper, that there was plenty of material to justify my entertaining the idea of taking on a contract for the whole series of Papers for the Session.

I have not strayed far from my intention except in starting, and as this is the *first paper* dealing with *first principles*, on the *first night* of the session, the *first addressed specially* to our young men, we may be held excused if, for the sake of a proper start, we have to refer to the "*Primary*" sciences in which there is so much to interest us. After progressing so far with this Paper, I thought it well to change the title. Such a change as this may have been within the experience of you young engineers, in the course of your daily work. Doubtless you have had a rough casting or forging dumped beside your bench, presently the shop foreman comes with a plan or sketch and gives you explanations of it, sets it off, with instructions how best to manipulate this rough forging into a finished piece of mechanism. You proceed through all the various processes of chipping, file-shoving, turning, etc., persumably with all the intelligence at your command, bent on properly interpreting the plan, gauge, sizes, etc., until you have completed the whole work of preparing this rough piece of iron and turning it out of your hand as a finished piece of mechanism, or perhaps, as the case may be, the foreman might call it by the less dignified title of *scrap iron*.

This may serve to explain how the name of a thing becomes changed, and generally in the course of prepara-

Digitized by Google

tion. It so happened in my case, with this difference, that I was made to feel that it was by far the best way to arrive at the soundest conclusion, so much so that at this point the subject itself (though in no way departed from throughout) was completely over-shadowed by the subject-title the paper now bears, viz:—"Scientific Tri-unities," the connection between which and the "Characteristics of Handiwork" is so very *close and strong*, that I hope to be justified in considering that any other title would have been misleading.

I will now proceed to shew the connection:—

In the first place what is a *tri-unity*, the word itself is a compound one, derived from two Latin roots, viz, *tres*, signifying *three* and *unus* meaning *one*, therfore a *tri-unity* is literally what the simple sense of the translation implies, a *three-one-ity* (so to speak) and signifies a thing, *one* thing that has or bears a three-fold character, each distinct and separate, but when combined make up one grand consistent whole.

To illustrate this simply, you are met here to night as an audience to hear a Paper read (a unity in one capacity). I am here to read the paper (a unity in another and rather more questionable capacity), and our esteemed chairman is here presiding over us (a unity of a third distinct capacity); there are thus three units, all combined together for the *one* grand purpose of forwarding the interests of the "Institute of Marine Engineers." That is one tri-unity, but I daresay you will agree with me it is not a very scientific one. Another illustration of tri-unity less complex than that, and beautiful in its simplicity is the flag of our country, the "*Union Jack*." There you have the three separate flags of the three countries of England, Scotland and Ireland, with their symbols in heraldry — the crosses of St. George, St. Andrew and St. Patrick united and blended in one flag, the Union Jack, forming the National Flag of the United Kingdom of Great Britian and Ireland (a tri-unity that holds good up till date at least). Well, these are ordinary tri-unities, and in dealing with them I came upon the scientific ones while searching the old authorities for suitable illustrations among the early mechanics and their historical feats of engineering, and was successful in tracing them back to the deeds and dates of the Pyramids. I was even further than that and in many curious places hunting for tri-unities. I was down the fore peak of the Ark one night (in a dream) and, by the way, I thought I saw a job or two down there—at least things were not quite in accordance with Lloyd's Rules; I could see neither a sluice valve in his collision bulkhead, nor a pump, but I said nothing about

Digitized by Google

it from sheer force of habit, and partly out of reverence and respect for the grand old shipbuilder, Noah, as he had left several tri-unities about loose and the fore peak hatch off; but I was so disgusted at being unable to find the engine-room, that I woke up and found myself in the chair with the midnight oil still burning and daylight full on.

I got several tri-unities there and at the Pyramids, but however seductive they might be to the author of a Paper who desired to take advantage of the opportunities afforded, of enlarging upon a subject, unfettered by disagreeable questions of fact, especially if he desired to get beyond the chances of contradiction at the discussion stage, I considered them not sufficiently satisfactory for the intelligence of this audience on the present occasion, so I will not touch upon the tri-unities adorning the dates referred to but merely remark that I found them.

I also found them earlier, and I will *enlarge* upon *them*, as I know they will commend themselves to your understanding—notwithstanding the apparent paradox. I now specially refer you to what is universally admitted to be the biggest bit of engineering known in history (ancient or modern), I mean the "*Creation of the World.*"

In a piece of handiwork of such vast magnitude and importance as the Creation of the world, we even find "Tri-unities," clear and palpable in form, and in the front rank of first principles. Can this be accounted for, and placed within the category of "Characteristics?" If it is really necessary that I should make manifest the connection between "Tri-unities" and the "Characteristics of Handiwork" which I previously described as being close and strong), I shall do so now, and in the briefest possible manner. I shall merely indicate regarding the personalty of the Designer and Creator of the World, that we know, on His own indubitable authority, that the principal and distinguishing characteristic, permitted to be known to us mortals, is His Triune nature, and would draw your attention to the remarkable similarity of characteristics between the *Creator* and the *created*, the Designer and His *handiwork*. The latter bears the triune characteristic, qualification or reflection, through all the essential principals, laws and features of created Nature, extending down through its several sciences to the professions and operations more or less under the influence of the will and necessities of human agency, even to the minutest details, where principles are involved, and this appears the more remarkable the closer it is studied.

Let us look at some proof examples of this theory, and see how far and how well the generally accepted Laws of Nature and

Digitized by Google

of Science bear this out. Starting at the initial operations in Nature—apart from the many conflicting theories regarding same, some of which are, however, rich in triunities—and taking as authority the most ancient of books, as indicated in the first chapter of Genesis we find "Triunity" in evidence by the creation of the world on the *third* day, or period of time, and that even, prior to this event, Triunity is illustrated by the trio of indispensable operations necessary and preparatory for the world's creation, and so stated therein also viz.,: 1st "universal darkness was dispelled"; 2nd "Light was created"; and 3rd "the firmament was set."

Then other important triunities follow here in quick succession, but I must pass from that era, as time will not permit of more than a selection from each by way of example and suggestion—the others will readily occur to you, or will be within easy access by reference—and leaving this authority for that of the more modern scientists who all agree in informing us that the "earth's" position in the "planetary system," coming after "Mercury" and "Venus," is *third* in distance from the sun—and so on, as continued under the heading of Astronomy.

As we began with the world's creation, let us follow it up.

The *World, our Earth* is principally composed of *three* essential divisions, viz:—*Land*, the solid portion; *Water*, the fluid portion; and *Air*, the lighter element surrounding and enveloping them both and forming the complete triune divisions of the world we live in, with all the necessaries in it of our existence. From the first portion we obtain the minerals that go to form materials of which our vessels and engines are constructed. From the third portion are obtained the essentials for the chemical processes of fusing and preparing them, and the other supplies the means of flotation and of communication for the completed structures. From the latter division also our profession of marine engineering mainly derives its great importance.

But I am digressing (perhaps from excusable bias) and must return where we left off at the divisions of the Natural World, which next presents to us its Kingdoms for consideration.

The Kingdoms of Nature, what are they? They are the sub-divisions of the previous triunity.

How remarkable that this characteristic should obtain in regular sequence (and lineage as it were) from unity to division, from division to sub-division, and these all again divided and subdivided to degrees.

Digitized by Google

The Kingdoms of Nature afford a beautiful (because simple and obvious) illustration of our subject in the sub-division of *Birds*, *Beasts* and *Fishes*.

The Elements of Nature, another, in the unities of *Fire*, *Air*, and *Earth*.

I trust I do not require to explain even to our junior section (whom it is understood I am directly addressing all along to-night) that water is *not* an element.

To put the matter briefly and as beyond my authority, and in settlement of any doubt or impressiom, I now quote from Joseph Glyn's "Power of Water," at page 10, thus:—"Water was long held to be one of the FOUR *elements*, and a hundred years have not passed away since it was proved that water is not a simple substance, but compound as composed of oxygen and hydrogen," and he states further that "the idea of the *four* elements must now be treated only as a beautiful allegory, a subject on which artists, poets and sculptors may exercise their imagination and their skill." So let the incipient poets of our practical profession beware in their enthusiastic moments and remember there is still left great scope for poetical sympathy—in this lowering of the dignity of their ideal from its exalted standard as one of the Elements of Nature—with those who will be found to bewail its loss in the *teetotal section* of our membership.

I have now treated one tri-unity, from its source in direct lineage to its sub-divisions, through five generations from the Preparation for, the Creation, the Divisions, the Elements, and the Planetary position of our world.

I now come to the second portion of this section, and going back to the Triunity of *Land*, *Water*, *and Air* and taking the first unity—what are the principal divisions of land *Geographically*, they are: *Mountains*, *Valleys*, and *Plains*. Water (the next) and considered similarly, is represented by *Oceans*, *Rivers*, and *Lakes*. *Air*, the subtle and surrounding element being imponderable matter, can only be located geographically by its influence in its corresponding zones af the earth where it is *warm*, *temperate*, or *cold* accordingly. All these will perhaps be considered as sufficiently illustrative of the "Characteristics of Handiwork" that are found within the realms governed more immediately by the great and unerring "Laws of Nature," and where they principally might be expected to obtain and rule; but they are found outside of that region in number quite as frequent, and in form as palpable. The latter instances verging on the borders of their several Sciences will be considered under their headings. Therefore, quitting the sphere of "Nature-governed"

Digitized by Google

Triunities (so to speak), let us wander among these Sciences, with their phenomena, their teaching, their tendencies, their deductions, formulæ and results, with their effect on the practice of the professions founded on them, and demonstrated in the faith, facts proverbialisms and operations within the domain of ordinary life and daily work, more or less under the influence of human agency and will.

Beginning with the Sciences, I may *primarily* indicate that they have a *triunal* classification.

The Sciences are divided into three general classes, viz. :—"*Celestial Sciences*," "*Terrestial Sciences*," and what is generally known as the "*Social Sciences*." I need not here descant upon their several domains, as, if they are scarcely obvious, they will be made so in the course of the Paper, but I would merely mention with regard to the latter that are so-called because they are necessary, and in some instances indispensable to man for his investigation and enjoyment of the other two. A most reasonable distinction indeed, and without which this Paper would be sadly wanting in proof and detail of the theory put before you for consideration and discussion.

I will open with the science of Astronomy, meanwhile remarking that the more obvious the "*Triunities*" appear the briefer will be my remarks, and the more obscure they seem to appear in some of the abstruse sciences, on account of their being seldom in ordinary use or general study, I will endeavour to treat them more comprehensively, some (perhaps a good many) being beyond my own experience, will be authoritively quoted and acknowledged acordingly.

Of the "Celestial Sciences" then "Astronomy" is the first to which I would ask your attention. It is the study of the heavenly bodies, and treats of *three* principal features regarding them, viz. :—their *size*, *distance*, and *motions*. As to the bodies themselves *we* are confronted at once with the obvious tri-unity of the *Sun*, *Moon*, and *Stars*, this one includes them all. Again taking say the "*Stars*," of which there are three different kinds, viz., the "*Fixed Stars*,"—so-called because they keep the same position in the heavens relatively to each other—the "Planetary Stars" which revolve, or rather wander (as their name properly signifies) in regular orbits about the sun as centre of the solar system,* and "Comets," or erratic stars, which are sufficiently well understood as belonging to neither of the two former classes, and mostly all that seems to be well understood about them is this distinction.

* There is also this distinction between the fixed and planetary stars, that whereas the former shine with a steady light, the latter always twinkle.

Digitized by Google

The "Planetary aspects" most frequently alluded to, denoting their positions relative to one another are, the trio of *Quadrature*, *Conjunction*, and *Opposition*. Another Triunity I shall detail is the Laws that regulate the "Planetary Motions," called "Kepler's Laws," discovered by John Kepler, a celebrated German Astronomer of the 17th century, who thus won the title of the "Legislator of the Heavens," after the splendid discovery of this Tri-unity of Stellar Statutes, associated with his name.*

There are still more Triunities with which perhaps we are more familiar, such as the "motions of our own crazy old Planet, the Earth,"—first, its diurnal revolution in 24 hours, constituting our day—second, its annual motion round the sun making our year—and third, the oscillation of its axis upon the plane of our Ecliptic, having its slight influence on the relative length of days and nights respectively.

Excuse one more for its own sake; I now refer to the three well-known terms that express the ordinary and astronomic limits of this starry region, viz., the "*Horizon*," that bounds our vision on the plane of observation, the "*Zenith*" immediately overhead, and the "*Nadir*" immediately underneath.

The full power of this interesting trio is only brought out when we do not fail to remember that, "every point on the surface of the earth has a Horizon, Zenith, and Nadir of its own, and that these again are constantly varied in character by the continual motions of the earth."

Hanging this astronomical wreath of sparkling tri-unities on the Zenith to mark the progress we have made among the "twinkling constellations" tending to lure us further than time permits to-night, and descending from this airy cloud-land, we alight on the more solid "terra firma" of our own Earth, and *Geology*, the science that describes it, suggests itself at once. Geology treats exclusively of the three general properties of the Earth, viz.:—its *Size, Shape and Density*. (This is a fair beginning in the section of "*Terrestrial Sciences*," and I may also incidentally mention here that our Earth is divided "geographically" into three great continents, viz.:—The *Eastern* or European continent, the *Western* or American, and the *Southern* or Australian continent.)

---

* Kepler's Laws—Astronomy.

*First Law.*—The orbits of the planets are ellipses having one focus in common, and in this common focus the sun is situated.

*Second Law.*—The Radius Vector of a planet passes over equal areas in equal times.

*Third Law.*—The squares of the planets' times of revolution round the sun are proportional to the cubes of their distances from the latter.

Digitized by Google

The Earth's Composition is further classified "geologically" as follows, viz.:—*Rocks*, the mineral and solid portions; *clays*, *sands*, &c., the plastic portions; *rivers*, *lakes*, *oceans*, &c., the fluid portions. Take one of these for further analysis, say *Rocks*, geologists further classify them as follows, viz.:—

1. "*Aqueous*" rocks (of sedimentary origin), so named because water plays the most important part in their formation.
2. "*Igneous*" rocks, in which fire was the principal agent, they having once been in a state of fusion.
3. "*Metamorphic*" rocks, which are *crystalline*.

These are all "again" grouped according to their mode of origin, thus:—

1. "*Mechanically-formed*" rocks, formed purely by mechanical means from the ruins of previously existing rocks.—(Shale is an instance of this group.)
2. "*Organically-formed*" rocks, consisting of accumulations of animal and vegetable remains. (Coal is an instance.)
3. "*Chemically-formed*" rocks, produced by chemical means in Nature's own Laboratory. (Rock salt, gypsum, &c., are instances.)

The times of formation (or ages) are divided into three great periods, viz.—The Palœozoic, the Mezozoic, and the Cainozoic periods.

Having now been for some time a visitor on the earth and explored its Geology and general features, what would next affect our consideration of it as a possible place of residence? Its climate. Well, this is embraced in the Science of *Meteorology*, which treats of the phenomena found in its (3) different zones—The "*Torrid*," the "*Temperate*," and the "*Frigid*" zones; and the details of "phenomena" that occur in these regions, are meteorologically classified, thus:—

"*Aerial*" phenomena such as winds or hurricanes.
"*Aqueous*" „ comprising rain, fog, snow.
"*Luminous*" „ as lightning, meteors, &c.

The first of this triunity for sub-division into three gives "*constant*," "*periodical*," and "*variable Winds*," representing "*Trade Winds*," "*Monsoons*," and the "*Winds*" of our own temperate climate, respectively in order.

Now all these rather suggest the discomforts of life out-doors, and the consequent desire to get indoors, especially about lunch time, for the indispensable necessity of food. *Food*, then is the principal section of the science of *Hygiene*, which informs us that the food of man is of (3) different kinds and for three different purposes (a sort of twin tri-unity this).

Digitized by Google

The Hygienic cla:sification of the food of man runs thus, "*Mineral*," "*Carboniferous*," "*Nitrogenous*" foods, and may be classed as "*Solvent*," "*Heat Givers*" and "*Flesh Formers*"—all required as "ailmentary food" (this word as used in Hygiene means "essential" or "indispensable"), examples of these are as follows, viz:—*Starches*, *Caseine* and *Salts*.

After a luncheon of such tri-unities, we are perhaps inclined to think the pleasures of life would be next in order, succeeding its comforts. What is to be the entertainment then? Song—(very well). In the science of Music and the Province of Acoustics, or Sound. I need hardly remind you, here, that the poet has graphically informed us that "*music hath charms*," and I am here to-night to tell you it has its tri-unities also, viz:—Music is produced by (3) effects, viz:—The *Production*, *Propagation*, *and Reflection* of sound. The science of Acoustics (of which "sounds" are the study) is itself only concerned to the triunal extent of their *Production*, *Transmission* and *Comparison*.

There are only three different kinds of musical instruments, or arrangements, severally and familiarly known as "*Stringed*" instruments, such as the violin or piano, "*Wind*" instruments such as the organ, and those that emit music by *Percussion*, such as a carillion of bells, musical glasses, or blocks of metal or wood struck by a hammer-like instrument. (I am not quite sure that the *drum* comes under this category, but perhaps the professional of the Institute, will strike this note clear in the discussion stage.)

In addition to all this, I may indicate that "*Musical tones*" have three leading properties in the science of Music, and these three we admire in its best exponents, *i.e.*, *Pitch*, *Intensity*, and *Quality*, and when these three are combined in one Artist, we have to book early to hear him comfortably. (I have personally investigated the "*kinds*" of music, and find they can be distinctly classified in the three comparative groups of *good*, *middling*, and *execrable*.)

Let us now take a morning walk in the garden, where we will find in full bloom the beautiful productions resulting from the study of the *Science of Botany—that Prince* of the "*Vegetable Kingdom*," to whom I previously promised, I would introduce you later on.

Now I dare say those who would court this Vegetable Prince successfully within his own domain (even though it is only a back garden) know to their cost that digging is a matter of first principles there, and it seems to hold good also metaphorically—buried as it is among the technicalities of the Science of Botany. By virtue of a series of sore backs, I might be supposed to have some slight knowledge of the secrets of this Tri-unity in

Digitized by Google

the Vegetable Kingdom, yet I ask you to accept a higher authority, that of Hutton Balfour, Professor of Botany, from whom I quote as follows, viz. :—"In arranging plants according to the natural system, the object is to bring together those which are allied in all essential points of structure. It is called natural because it follows the system of Nature, and thus takes into account the true affinities of the Vegetable Kingdom on a comparison of all their organs. According to these general principles, the Natural System is founded, and which is that adopted at the present day."

The whole vegetable world is so classified then, as follows, and divided into *three* distinct classes, accordingly, viz., the *Acotyledononous* plants, which have no cotyledons or seed-lobes, the *Monocotyledonous*, which have only one, and the *Dicotyledonous*, with two or more cotyledons or seed-lobes, the latter generally called *Polycotyledonous*, as it includes those having *many* seed-lobes. Completing the tri-unity graphically and in a more familiar form I may say that the "*Fern*" *family* of plants represent the first, the "*Orchid*" *family* the second, and the "*Rose*" *family* the third; specimens of each class are indigenous to Great Britain and also to that "Unity" of it called Scotland.

The proverbial "Old Man" now comes to water the garden, so we must leave, as we have met the liquid in the previous tri-unity of *Land, Water and Air.* Is there anything in water itself? There must be, as some good people pin their faith to it for very different reasons, I take it just now for its important contribution to our subject.

How does water illustrate this? In its three essential properties, viz.: the *fluid*, the *solid*, and the *aeriform* state. (I could scarcely afford to dispense with this watery tri-unity as I am sure it is so obvious and familiar to you all).

But "water" has a further charm for me. The laws that govern its pressures, under the science of *Hydrostatics* we find are only three in number:—

*First Law.*—Liquids subjected to Pressure transmit it undiminished in all directions.

*Second Law.*—Liquids influenced by Gravity alome press in all directions.

*Third Law.*—The Pressure of Liquids in every direction is proportioned to their depth.

As some might be disposed to question the principles by which these fundamental Rules, Laws and Properties are satisfactorily obtained and made manifest to the extent of general acceptance, they might be answered to the effect that it is principally

Digitized by Google

due to an intelligent and studious use of the opportunities that pertain and occur within the range of the very simple *science* of Optics, which primarily treats of the *Eyes*, then "what is visible to them," and third "the light or medium by which things are made visible," Therefore "Light" is the principle essential in the science of *Optics*.

The sources of *Light* are very nearly the same as those of *Heat* (which will be treated more fully in sequence, I need only indicate them here); they are the "*Sun and Stars*," also "*Chemical*," and "*Mechanical*" action. Then as regards the first important property of *Light*, viz., its "*Power of Transmission*," bodies are divided into three classes, *i.e* :—

"*Transparent*" or such as allow light to pass freely through them, as glass.

"*Translucent*" or such as allow light to pass through them, but *not freely*, as ground glass, thin paper, or horn.

"*Opaque*" or such as do not allow light to pass through them, as wood, stone, or the metals.

Next after "*Transmission*" comes the second property of "*Reflection*." The "Great Laws of Reflected Light" are best investigated and explained by the aid of mirrors or lenses, of which there are only three kinds, the "*Plane*," the "*Convex*," and the "*Concave*"; the light reflected from them produces the three interesting optical effects of the Rays of Light described as "parallel," "converging," and "diverging," which differ when produced by each of the different kinds of mirrors.

From these are evolved the remarkable phenomena of the "*Solar Spectrum*," with its prismatic production of the primary colours, and more remarkable still that through the medium of the Solar Spectrum comes the distinct definition (as a contribution to general scientific knowledge from the branch Science of Optics), that every ray of ordinary sunlight has three (and only three) distinct properties, viz., "*Brightness*," "*Heat*," and "*Actinism*," the meaning of actinism in this connection is "the power of producing chemical effects," and (as illustration) forms the basic principle of the art of the photographer, and leaving these optical tri-unities in his care for development, our *vision* will now be sufficiently clear to pass over the stepping-stones of the brook on the borderlands of our own particular unity in the Sciences, viz., Mechanical Science. We find "*Geometry*" is located within this borderland, and rightly so, as he is a good and helpful neighbour.

*Geometry* is the science which treats of "Magnitudes." Theoretical Geometry treats of the properties of Magnitudes and

Digitized by Google

Practical Geometry of their construction.

There are three kinds of Magnitudes which have also one, two, and three dimensions respectively, viz. :—"*Lines*," "*Surfaces*," and "*Solids*," and may be represented by diagrams.

"*Lines*" are made up of an infinite number of points, "*Surfaces*" of an infinite number of lines, and "*Solids*" of an infinite number of surfaces. Most young graduates know of course what a *line* is and how many different kinds of "*lines*" there are? The three different kinds are the "straight" line, the "curved" line, and the "spiral line; all other lines are combinations of these (as shewn in Diagram).

Although *lines* form the simplest elemeut of this science, they are capable of demonstrating triune principles still further in their *measurement*, which to be complete has three necessities, an *initial* point, *terminal* point, and *distance between them*. A *line* has still three more characteristics, which give it all its importance in geometrical figures or diagrams, *lineation* (or *continuance*) *direction* and *position*.

What properties has *Surface*, the second of the geometrical trio? Would we not be correct in speaking of its length, its *breadth*, and its *configuration* or *area*?

*Solids* are the third, regarding which it would be only plain common sense to describe their main characteristics, as *length*, *breadth* and *depth* or *thickness*.

While remembering that these are the fundamental principles which the *whole theoretical* fabric of our own particular division of the science is raised and regulated by, you will be led to perceive that arrangements, or combinations of lines, surfaces and solids go to form a *design*, which brings us within the sphere of practical geometry as applied to constructive purposes.

Ideas are represented in a Plan or design of a proposed Erection, and to be fully serviceable for this purpose it requires to exhibit the three distinct essentials of *plan*, *elevation* and *section*—these are the principal characteristics of a complete *design*.

Proceeding intelligently, our next step would be to test theoretically the qualifications of the *Design*, its accuracy and fitness for its purpose of reproducing the structure correctly. This is principally effected by calculation, within the science of Arithmetic, into which we might enter for a little.

Arithmetic is one of those educational accomplishments that are freely referred to by incipient School Board candidates during election times, and so generally understood in this connection that

Digitized by Google

it is raised to the dignity of a proverbial expression, well-known as one of the "three" *R's*. (A casual Tri-unity, which I can scarcely afford to take advantage of seriously at present.)

The leading elementary exercises in arithmetic are well within the experience of graduates and you will recognise them as *Addition, Subtraction and Multiplication. Division*, as you know, being simply another method of subtraction, and as such does not find a place in some recent elementary books, one of which dated 1884, I now hold in my hand. These are the fundamental exercises, then, on which the others are based. If we go a little further we are confronted with the indispensible *Rule of "Three,"* the importance of which is irrefutable. If another proof is desired, and the key note of this paper is sounding round the figure 3, might we not expect to find something special or exceptional about the numeral itself? The figures 1, 3, 6, and 9 occupy the principal positions of our numerical scale, 1 the unity of 3 and the only one it is capable of being divided into, occupies the premier and initial place, 9, its square, occupies the terminal position, itself and its double power tri-unity, 6, occupies the intermediate. Thus the principle positions of *initial, intermediate and terminal* importance in our numeral scale are held by its unity, its single and double, and triple power, as tri-unity.

That its triple power has special and important attributes I now wish to show you briefly, and I have prepared a diagram illustrating it. I have no doubt the seniors are acquainted with it, but it might interest the graduates. * This peculiar power of our numeral tri-unity tripled (viz.: the figure 9) is a property neither approached nor possessed by any other figure in the numeral scale, and is largely taken advantage of and utilised by accountants and others dealing with extensive calculations, for the important purpose of checking their accuracy and is much depended on by them. There are others in connection with this science but (speaking in a graduate sense) it is time to part from the drawing office or theoretical department and accept the promotion of a course through the shops, where its principles are applied and we are early brought into contact with the properties and application of the various mechanical powers.

In the first place we must not forget that Mechanism is governed by certain well-defined principles, and has stated or prescribed functions to perform; we will deal with the latter now that we are in the shop. What is the function of mechanism? not the *general*, you know, but the reverse, the *particular* function of mechanism. Is it not to *receive, concentrate*, and *apply* power? All these three, for the purpose of *overcoming resistance*. In the

* See addenda for illustration of this Addition, Subtraction and Multiplication.

Digitized by Google

simple mechanical powers themselves we are favoured with a remarkable instance of *twin tri-unities*, one member of which is the *lever*, *the wheel and axle*, and the *pulley*, these form what is known as the "*Lever*" series of powers, and the other member is the *inclined plane*, *wedge*, and *screw*, as the "*Wedge*" series. In further illustration, take of the former series, viz., the "*Lever*," there are three distinctly different *orders* of the simple lever itself. A lever of the *first* order, has the fulcrum between the power and weight; in the *second* order, the weight is between fulcrum and power; and the *third* order has the power between the weight and the fulcrum.

Those are the powers and their kinds and orders, but how are they all serviceably requisitioned—principally by *wheel-work* which enters more largely into mechanics than any other form or arrangement. The principal duties of wheel-work are three in number, viz., to *receive*, *transmit* and *give direction* to the power they are charged with, and this is effected in three different ways, viz., by *friction* of their circumferences, *by bands*, or by *toothed gear*, the latter being most extensively used, and of which there are again three distinct orders, viz., those with their teeth perpendicular to their axes, such as *spur-wheels*; those with their teeth parallel to their axes such a *crown-wheels*, and third, those with their teeth set at an angle such as *bevel-wheels*. These then are the methods generally used for transmitting and directing power and motion which come direct from the SOURCE OF MOTION, a more or less complex arrangement of the foregoing different parts and principles, and situated conveniently for producing the power and motion required. Regarding this (the Engine) as an abstract subject, you are well aware that countless volumes have been written, and still they come. I am sure we are all proud to belong to a profession that can awaken such an absorbing interest, and call forth such apparently limitless literature, all centreing round the single word ENGINE. Our own syllabus testifies to all this and for fear of overlapping the province of the Papers indicated there, I will only give a few examples of tri-unity (and that in first principles) here,—beginning with the three principal kinds of steam engines, *i.e.*, the *fixed* or *Stationary* engines for manufacturing purposes, such as a shop's engine, then the *Moving* engines, such as Locomotives, and third *Marine* engines for propelling vessels. We have no *flying* or *jumping* machines yet, so you see there is great scope for you young grauduates. Again we have another tri-unity in the constructive differences of the classses of steam engines, viz.:—

The *Low Pressure* engine, in which the steam is discharged at a pressure under that of the atmosphere.

The *High Pressure*, with its steam discharged into and again--

Digitized by Google

the pressure of the atmosphere.

The modern *Compound engine* too familiar for description here.

But what is the use of engines without *motion*, the "breath of life" to machinery.

*Motion.*—In the province of Dynamics; how many kinds of motion are there, and what and how many are its laws?

There are three different kinds of motion, classed as follows, thus:—*Uniform, Accelerated and Retarded.*

*Uniform* motion, is that of a body which moves over equal spaces in equal times.

*Accelerated* motion, that of a body whose velocity keeps increasing as it moves.

*Retarded* motion, that of a body whose velocity diminishes as it moves.

By deep investigation into the principles of motion, Newton discovered the great established laws which govern it, and they are Tri-unity also, and I quote them seriatum:—

*First Law.*—Every body continues in its state of rest or of uniform motion in a straight line, unless acted on by some external force to change that state.

*Second Law.*—Change of motion is proportional to the impressed force, and takes place in the direction of the straight line in which the force acts.

*Third Law.*—Reaction is always equal to action, and opposite to it in direction.

It was this third law (the law of reaction), that upset the theory of the engineering genius of the early navigation days, who was exercised to invent a propelling power for vessels in calms, and carried it out to the full scale of practice by actually fitting up on the poop a huge bellows to blow into the sail, so that he would always have a fair wind.

It would'nt *hum* however, and he could'nt tell why till he went home in the evening, when his very sensible lady told him that he might as well have tried to jump up to the garret by pulling at the straps of his boots.

As it is in sequence, I may as well give a passing reference to another kind of *motion*, which has laws of its own, I refer to *pendulum motion* or *vibration*, they are also three in number. *First:* Pendulum vibrations are performed in the same time whether it moves through longer or shorter arcs. *Second:* Vibrations of pendulums of different lengths are performed in different times, and the lengths are proportional to the squares of their times of vibra-

Digitized by Google

tion. *Third Law:* Vibrations of the same pendulum are not performed in the same time, at all parts of the earth's surface, but being operated on by another great law in nature, differ according to its distance from the earth's centre.

The great law of nature just referred to is *gravitation*, which is itself distinguished by a tri-unity of established principles in its operations, thus:—

First: Gravitation acts instantaneously.

Second: Gravitation is not lessened by the interposition of any substance.

Third: Gravitation is entirely independent of the nature of "matter."

As we might unconsciously be led into subjects allied to this by going further in this direction, it might interfere with the scope of a Paper I notice on the Syllabus, and which we have yet to hear, and as our friend (Mr. Hawthorn) might be desirous of treating it more or less technically, I had better keep about the shop where we left off without ascertaining the *forces* that actuate the machinery there, or their *sources*.

*Force.*—In the province of statics; the science of Mechanics does not consider the nature of forces, but treats only of the properties common to all. *Forces* from different sources, however, may be compared with one another, and are thus capable of being determined by numerical valuation; and I have only to mention the three *principles of Force*, when this will be clear—1st. Its *intensity*; 2nd. The *point of application*; 3rd. The *direction*.

While it is a well-known fact that *heat* is a *source* of mechanical force or action, it is equally familiar that mechanical action is a source of heat.

"Heat," as an agent, was evolved in three ways in the primitive ages, as when the rude Indian obtained it from the rays of the sun or (when it was not shining) by "friction" (rubbing pieces of dried wood) or third by "percussion," striking metallic flints together) so in this way heat was obtained by "striking," as a source of mechanical action; but this, by the way, has an obverse too, the present deplorable circumstances forcibly exemplifying that "Striking is a source of complete mechanical inaction also"* but which we trust will soon be got over by the judicious exercise of the tri-unity of moral "Graces," "*Faith*" on the one side, "*Hope*" on the other and "*Charity*" on both, but especially on the part of the public generally.

*Alluding to the Great Strike at the London Docks.

Digitized by Google

We have improved upon the Sources of Heat in these modern days and classify their origin as "Mechanical," "Physical," and "Chemical," a familiar trio, I dare say. Having ascertained the Sources of Heat let us examine its properties, which again take the form of tri-unity, but *red-hot* this time and very convincing. The first illustrates "*Conduction*," as when heat passes from one particle of a body to another in contact with it (one end of the poker in the fire, the other end becomes heated by *conduction*). "*Convection*," as when heat is conveyed by the actual motion of some particles of a body such as obtains in any form of boiler, the particles of water first heated ascend, carrying heat with them and diffuse it by *convection* (or literally by being conveyed). This is usually demonstrated by means of the Florence Flask; being of glass, the action is observable through it. The third (and last) property of heat is *radiation*, that is when it passes from one body to another, not in contact with it, leaping over the intervening space between them. A joint of meat placed before the fire is roasted by *radiation*. What becomes of it after that, is scarcely within the province of this Paper, unless you may be interested in its composition, which I take it is generally well within the intelligence of a graduate, as being *lean*, *fat* and *bone* principally. There are many tri-unities connected with roast meat that are extremely interesting to graduates. When a joint of meat is being so warmed by radiation, what philosophic deductions are to be drawn from it in a purely graduate sense? Taking my stand upon personal experience, and which may be influencing most of us here at the late hour, I might ask does it not betoken the near approach of these triune blessings so dear to the soul of every graduate, viz.: *Knocking-off-time*, *supper-time* and *bed-time*.

This reminds us forcibly of the most important tri-unity in this paper, (as in many speeches), viz.:—Its *thirdly* and *conclusion*.

Although much remains to be considered in the sciences I have mentioned, and in many others not touched upon here—all of them rich and radiant with appropriate illustrations of *tri-unity*—I have been careful to select examples from those only that were plain and familiar and readily understood without reference, if by doing so I have cramped or crippled the importance of the general subject, I trust at least that the object in view was evident, viz.:—The moral I desire our graduates to draw from the paper (as indicated in the prefatory remarks) is to assiduously cultivate a sincere desire to excel in their great profession on every opportunity, and to prepare themselves accordingly by application, perseverance and thoroughness in practice, and their *handiwork* will thus obtain a *character* that will enable them to stand behind their work and let

Digitized by Google

it speak for them, for so surely as this is done, as certainly will it be made evident to those who desire to retain your services and avail themselves of their advantages.

Thus precedence will be given by virtue of a "characteristics of handiwork" and acceptance in the eyes of the great general triunity of *superiors*, *inferiors*, and *equals*, while a further distinction as a "Medallist" of the "Institute of Marine Engineers" awaits those whose "characteristics of handiwork" are in closest accordance with the spirit of the old Latin proverb, *Omne trinum perfectum* meaning, that "there is a *three-foldness* about all things perfect."

## MR. M. PRIOR'S REMARKS.

I have listened with pleasure, and—at times where the Author has introduced his pleasantries—with some amusement, to the Paper just read on "Scientific Tri-unities," and I think we must all be very forcibly reminded of St. Patrick's visit to Ireland to demonstrate the "Tri-unity" of another subject, and Martin Tupper's remark in his Proverbial Philosophy "that there is a Tri-unity in all things." Although I am far from endorsing all that has been said by each individual member of this tri-unity, yet taking them in regard to time, as St. Patrick, Martin Tupper, and Mr. Craig, I can fully understand Mr. Craig saying that in writing on scientific subjects, the difficulty is not how to get matter sufficient for one paper, but how to give in one paper only a trace of some of the scientific questions. Therefore, I am not surprised that Mr. Craig has not entered into any one particular scientific question, but has given, for the benefit of our junior members, what may be called a "preface" to the study of scientific subjects. Now any one who can turn the minds of the junior members of the Institution to the study—ah! and the love of science—may well be taken as a benefactor to them, for we can all be assured that there is no profession, trade or calling, in which a general scientific knowledge is not only useful, but necessary to an engineer, and more especially to a marine engineer, for he must have the brain to guide, in some instances, thousands of horse power, over thousands of miles of the earth's surface, when thousands of miles from land, and without any extra help in cases of emergency. But whether we study scientific subjects or not, we all have to act on scientific principles from the first. In reading one of the works of Mr. Piazzi Smyth, the late Astronomer Royal of Scotland, I was surprised at a statement therein made, viz., "that all science consists of *observation* and *measurement*." This is not a Tri-unity. This statement seemed much too simple to be true, but taking it to be true, as I firmly believe it to be, every child before it can walk is to a certain extent a scientist, for if you place

Digitized by Google

t alone on a chair it is afraid to fall off, showing, that it has *observed* the distance to the floor, and found the *measure* too great for it to descend without help. We all have in ourselves the most wonderful scientific arrangements with which we must act strictly in accordance; but, constantly acting upon them, we seldom give much thought to them, and treat them as we are too apt to treat little things—with contempt. The least things are just as true to science, however, as the greatest. Taking only one instance to show how wonderful are the scientific arrangements of the Human body, viz., the human voice. On the authority of Dr. Talmage, of Brooklyn, the human voice is capable of producing *seventeen trillion* sounds. Now it would be a nice calculation to find how many of the best constructed organs it would take to make that number of sounds; no doubt it would take millions of them.

Mr. Craig alludes to the great discovery of Sir Isaac Newton; here I think a very good "Tri-unity" might have been made by taking Galileo's discovery of the earth's motion round the sun, Sir Isaac Newton's discovery of the attraction of gravity, and the greatest discovery of the present age, viz., that energy, like matter, cannot be created and cannot be destroyed. Before sitting down I should like to ask Mr. Craig if he is correct with regard to the number of planets between the earth and the sun, for without taking the poor moon into consideration, except as our despised satellite, another planet has, I think, been discovered between Mercury and the Sun.

## MR. ROWE'S REMARKS.

In the interest of the younger members of the profession whose minds are in a plastic state, I should like permission to make one or two remarks. In the first place I desire to compliment Mr. Craig upon the great diligence shown in his exhaustive paper; and if young engineers would permit themselves to be influenced by so excellent an example, there would be fewer failures at examinations resulting from carelessness aud idleness. Many men, both young and old, believe that professional success is due to superiority of natural parts—to genius in fact. Well, no two minds are equally endowed, but eminent men with a large knowledge of human history, have perceived that the greatest leaders of thought, and the grandest discoverers in science had, as a rule, shown no sign of their superiority whilst at school, at college, or at university. Senior Wranglers, become as a rule, lost to the world, and to fame, as soon as the university is left behind. The strongest mind was that which unaided overcame the greatest difficulties; and for purposes of discovery—of progress—it is desirable that some men should be to a great extent ignorant of and indifferent to authority,

Digitized by Google

for then their minds are free to receive without opposition, the results which spring from experiment and logical reasoning. Most men pass the greater part of a lifetime in conquering some errors learnt in youth. A century or two ago, children were taught by authority to believe that the sun revolved round the earth; and generation after generation of people (on the whole as good and nearly as intelligent as ourselves) accepted the teaching unquestioningly. May we not be living in a similar state of ignorance with regard to questions of high import; the fact is, all ages have been too ready to accept without verification the *ipse dixit* of preceeding generations. In saying that, I did not wish to inspire distrust of, and disrespect for the great minds whose teaching have stood the test of centuries, and are still the admiration of the wise. I wish rather to bring the student face to face with the great original thinker (each in his sphere) and seek from him instruction and support. Middlemen are my aversion. In my opinion 'tis good to be honestly sceptical. Doubt once established gives rise to investigation, and investigation experimental or otherwise, should lead to truth. Even should one's labours result in merely bringing one back to the starting point, the time will not have been wasted. The doubts, the experiments, the thoughtful conclusions arrived at, will have strengthened the mind, and prepared it for a clearer understanding of the problems yet beyond its ken. I would say to young men:—Pause, before uttering the words "I believe," let honest doubt be entertained, and whatever conclusion reason draws, accept it, whether it leads to emolument or penury; but in an enlightened age, no courteous man is ostracised for respectfully differing from his neighbours. Sir Humphrey Davy, a scientific genius, and one who rose from the ranks to the proud distinction of President of the Royal Society, once spoke to those assembled as follows:—"The *grandest, as well as the most correct views*, are those that have been gained by minute observation, *and by the application of all the more precise and accurate methods of science.*"

I have complimented Mr. Craig upon the diligence he has shown, but I am sceptical as to the existence of some of his tri-unities. My own view of the tri-unity in nature is the trinity of matter, force, mind. These exist pre-eminently in man in every form of animal life and are incorporated in every physical object by virtue of the *laws* which govern phenomena. Law is scientific thought *in operation*; therefore, matter, though dissociated from life, exhibits the impress of mind, and reveals the trinity.

With regard to Mr. Craig's treatment of the question of creation, I entirely differ from him, and in as few words as possible I will explain myself, and hope that some of the younger members

Digitized by Google

will in conclusion be led into a course of reading that would afford pleasure as well as instruction.

Copernicus, by study of Greek literature and reflection, accepted the Pythagorean system of the universe, and declared his belief that the sun (not the earth) was the centre of the solar system. Galileo demonstrated the correctness of these views. Newton revealed the laws governing the planetary phenomena, and established the truth that the planets are to the sun what children physically are to their parents. Laplace's genius gave to the world the splendid conception that the members of this family derived their being from a common source; that sun, planets, and satellites were originally a homogenous mass of molten matter, which, though once amorphous, gradually acquired form and motion; that the form was approximately that of a disc; and the motion that of revolution. By degrees—through long ages—the periphery of this revolving disc cooled, and became separated from its main body, and by attraction and accretion formed a planet, the *outermost* of the system. So successively with the other planets, thus creation began from without - not from the centre. We are not the third, as Mr. Craig had inferred, but the sixth in order of creation, excluding the orbit of the asteroids. It might be said, "If Laplace's theory of creation were true, the earth, at the beginning of its life as a planet, must have been an incandescent mass, just as the sun is now? It must also, one would think, have possessed then precisely the same elements that the sun possesses?" Exactly so, and in beautiful confirmation of the theory, the geologist has revealed the fact that, at one time, the earth's inner layer of crust (its igneous rocks) was in a *fluid* state, and the astronomer, by the aid of the prism or spectroscope, is now able to affirm without the slightest fear of contradiction, that the sun and planets are built of the same material elements, and that all are subject to combustion and decay; and, in conclusion,

> "Stars shall fade away, the sun himself
> Grow dim with age, and Nature sink in years;
> *We* shall still flourish in immortal youth,
> Unhurt amid the war of elements,
> The wreck of matter, and the crash of worlds!"

---

## MR. HAWTHORN'S REMARKS.

I should not like to go away to-night without expressing the extreme satisfaction and pleasure that I have derived from listening to the very instructive paper read by Mr. Craig. I am sure we must all coincide in one view, and that is the amount of trouble and labour entailed in getting such matter put together. I am perfectly sure that the self-imposed task has been a very pains-

Digitized by Google

taking one, and Mr. Craig has admirably succeeded in showing our Junior members what a broad expansive field there is for scientific research. I think that the paper we have listened to may be called perhaps a dissertation on science, and now that we have had the lead given us we may go on quoting indefinitely "Scientific Tri-unities," and without going outside the Marine Engine Room. We have 1st, the three ways in which heat may be conveyed, viz., Radiation, Conduction, and Convection; 2nd, Ebullition, Evaporation, and Condensation. Also the three strains, viz., Tension, Bending, and Shearing. The three motions that we as Engineers are most conversant with, namely, Reciprocating, Rotary, and Vibratory (or Oscillating), in fact there is no end to the ideas that Mr. Craig's paper gives birth to; and as this paper was written more for our juniors members than any one else, I am pleased to see so many present, and I am sure they must cordiallly thank him, and if they have received a little knowledge, and if Mr. Craig can only set them thinking in the right direction I am sure he will feel amply repaid. I am very pleased I managed to get here to-night.

## MR. JAS. ADAMSON'S REMARKS.

In the Paper read by Mr Craig we have the result of much labour and burning of the midnight oil; our thanks are due to the writer for what he has brought forth for the benefit of the junior section of our membership.

I regret that we have not heard the voices of some of the younger members and graduates who are present, as the facts have been collated chiefly for them to think over and push their enquiries further than the threshold of one or other of the subjects to which attention has been invited.

While examining and re-arranging some old papers one evening recently, it was my lot to meet with an Essay on "External Perception," written some years ago; in that Paper the line of reasoning led me to the conclusion that the knowledge gained by the eye was the most unreliable, and in order to gain reliable knowledge it was necessary to look below the surface of things, ponder over and study them in all their bearings, I have been furnished by Mr. Craig, unwittingly, this evening with a good illustration of this.

In the early part of the evening we were led to believe that a glance of the eye would reveal to us certain objects which we could unhesitatingly name. A small model piston was held up to view and indicated as a "Characteristic of the Handiwork" of one of our Members:—a "Buckley" Piston. The Junk Ring being now

Digitized by Google

removed, you will see at once that the piston is fitted with a "Common Packing Ring and Springs," and is, therefore, not a "Buckley" Piston. It may be useful to bear the lesson of this illustration in mind, although it is a pleasantry, there is many a true word spoken in jest. Be not content to obtain a superficial knowledge of things visible or invisible either, but go to the root of the matter, think for yourselves, and examine below the surface, taking nothing for granted, prove all things, and only hold fast that which is good.

I have much pleasure in moving that a hearty vote of thanks be accorded to Mr. Craig for his paper.

## THE CHAIRMAN'S REMARKS.

(Mr. F. W. Wymer.)

I would like to follow up the remarks made by Mr. Adamson when proposing a vote of thanks, and give a few words of counsel to the junior members - both those who are present and those who, though absent, may be privileged to read the paper given to the Institute by Mr. Craig—entreating them not to be in too great a hurry to run away to sea, but to stick to the workshop for a year or two after they have served their apprenticeship and get a more thorough and practical knowledge of the marine engine in all its phases. It is a mistake to allow a young man just out of his time to go to sea, it is bad for him and bad for the valuable machinery, and I would advise them all to read Mr. Craig's paper carefully, as it will tend to engender a desire in them to go more thoroughly into the scientific part of their business as well as the practical.

## MR. CRAIG'S REPLY.

It would be absurd for me to indicate that I am a votary of all the Sciences stepped over to-night, but I have been a most assiduous student of their elementary and general principles for the last month or two, aided considerably by the exceptional opportunities of reference afforded by the Public Libraries of this great City of London, and some of their learned and courteous officials, to whose kind assistance I am indebted and whom I thank.

Referring to the discussion I must say that the kindly criticism of the Paper leaves me very little to say in reply. Mr. Rowe spoke of Laplace's theory of creation as differing from that in the Paper; this is only a general exception, and not a particular one, as I distinctly indicated that my reference to the genesis of creation was taken as recorded in the Book of Genesis itself, in which I found the Divisions referred to, the finding of these anywhere being all I have to do with at present, and I thank my friend for the suggestion of Laplace's theory, as a possible hunting ground for more illustrations of Tri-unity.

Digitized by Google

Mr. Prior has not dealt quite so leniently with me, as he takes particular exception to the astronomical fact of the "earth's position in the planetary system as third in distance from the Sun," and I see by his assenting nod that I would be in order in referring to that point of his remarks. Knowing little or nothing of this particular science personally, I find on referring to the text of the Paper that I used the word "all," meaning that all the authorities I searched agreed on this particular point, and my own reference works (which I regret not having at hand here) are "Oliver's Astronomy" published so recently as 1888, where it is often stated, and specially tabulated as holding this rank among the eight major planets at page 119. "Natural Philosophy" also, by Quackenbos, an American Work, published in 1866, and (page 375) confirmed by a reference to all the standard authorities at my command; I can scarcely step in where astronomers seem to differ, and I should have liked if Mr. Prior had been able to quote or remember his authority, when the Institute might have settled the matter off-hand at this discussion. I would like to have this information when convenient, for sake of notes on the point and further inquiry.

The remarks on the Paper by Mr. Hawthorn, I think, indicate approval of the general object of the paper, also that its matter seems to improve by distance from the platform, with both of which I am very pleased indeed, and would only add that Mr. Hawthorn has caught the idea I held to be of considerable importance, viz.:—to shew there is great scope for thought and its resulting literature, which should engage the consideration of our young friends somewhere between the elementary principles—mainly dealt with to-night—and the latest engineering triumphs, on which high-class Papers are looked for from the Seniors, and we trust the Juniors will endeavour to cultivate their own special province in the wide field which lies between these.

I am not sure that there is any other point for me to refer to specially in reply. I may just say generally that I would like it to be quite understood that I am not responsible in any way for the theories, expositions or systems indicated or quoted in this Paper, nor do, I put them forward preferably or for discussion. I simply quoted them because they illustrated Tri-unities, and any standard or generally accepted theory, if supported by plain common-sense, is good enough for this object—not for the purpose of setting up a theory, but of simply calling attention to a wonderful pecularity. Some of you might consider the subject of Tri-unities sufficiently interesting to work them out to a greater extent than I have done in this Paper, and in the doing of it you

Digitized by Google

might come across important essential matters. At first sight the Tri-unities may not seem obvious, and in case it might appear that I shirked such as these to night, I will give you an instance. The "senses," though they do not illustrate Tri-unity numerically, yet otherwise they do so in a very marked manner, by their first principles, which I have all along made the test-guage of efficiency for Tri-unity. The knowledge of the external world, which the "five senses" are specially designed to convey to us, is due to the faculty of distinguishing objects and the methods by which this is accomplished by them, are of *three* different kinds:—the "Sense of touch" with its organ "the skin"; the "Sense of taste" with its organ "the mouth," both acquiring the information *by contact;* the "Sense of hearing" with its organ "the ear", the "Sense of seeing" with its organ "the eye," both acquiring their information *without contact;* while the "Sense of smell" can better assist all the other senses by its peculiar compound faculty of acquiring its information *by either or both ways.* It would be a serious omission were I to close this Paper on "Characteristics of Handiwork" without a reference to the noblest of all created work—*Man* himself. The *races* of man are classified into three great groups, the "White," the "Black," and the "Red," or copper coloured, and there is also a powerful illustration of Tri-unity exhibited in the three distinct separate natures of *man, woman,* and *child.*

Regarding the quotation from the Astronomer Royal "That all science consists of *observation and measurement,*" Mr. Prior remarked (almost with regret, I think) that it did not support the idea of *Tri-unity.* It is very fortunate that his usual lucidity did not forsake him in the matter of the illustration of the "infant scientist on the chair." In my opinion that infant is not only not a *scientist,* but is not safe on that chair until he not only *observes and calculates,* but in addition completes the Tri-unity by carefully "*exercising his judgment*" afterwards. By virtue of three distinct operations, which are alike indispensible to his safety on the chair, and his claim to the title of an "infant scientist," the theory of Tri-unity is fully maintained and confirmed, while I am sure it will be as pleasing to Mr. Prior as to myself, that the illustration remains as serviceable as ever for his purpose of demonstrating the deductions of the Astronomer Royal in the cases of other than "*scientific infants.*"

On further reference to Mr. Rowe's general remarks on the theory of Laplace, I found in my explorations among the Histories of Science, very few *obvious* illustrations of Tri-unity, such as I

Digitized by Google

specially desired, and in the theory of Laplace, I was of opinion that they were too remote or obscure for the initial stage of the Paper, and that the sources of reference also were rather inaccessible to juniors; Mr. Rowe has entirely dispelled this idea, by his admirable way of touching on it at the discussion stage, when we are better able to understand it. The reference to the Creation occurs early in the Paper, and though I was unable to press the theory of Laplace into service for my special purpose, I have now my reward in being able to appreciate it, from recent study of the whole subject. Mr Rowe in advancing the theory, or hypothesis of Laplace, invited the attention of our younger members to it as a subject for their study and resulting benefit, remarking that it far transcends any other theory that has been put forward to explain the origin of our earth, but it is only hypothesis after all like that of the ancient writer of Genesis, unless the latter was only responsible to the extent of recording "*legendary lore*," and which, perhaps, may be imperfectly interpreted by the sense of our translation. I understand Laplace himself put his theory forward with much diffidence, but it unites so many apparently unconnected facts by a few simple and general laws, well-known to be in action, that it has every mark of probability to recommend it. It involves no invention of a new agency, and no assumption for the occasion of special laws to to suit the case, the only hypothetical part consists in the assumption of a certain condition of things at a remote unknown period as Mr. Rowe has indicated, the theory harmonises with what would equally apply to the other planets as well as ours, and with the identity of similar chemical elements to that of our earth, as has been demonstrated by modern observations in the science of "Celestial Physics." It was the work of Newton to discover the great "Laws of Gravitation," yet it was Laplace who has pointed out that these same Laws assure the eternal stability of the Solar System, notwithstanding the threatening perturbations which occasionally affect the planetary orbits, and which he demonstrated to be in reality only slight oscillations about a mean position, as he himself graphically puts it, "Immense pendulums of eternity which beat centuries as our pendulums beat seconds." And as Laplace found these laws to be efficient in the preservation of the system, so he conceived they might also have operated in its formation. The theory advanced by Laplace is thus only a probable hypothesis, and before accepting it, or indeed any other, we must not forget what Mr. Rowe was careful to inculcate as to being honestly sceptical generally. There is another point I am honestly sceptical about, and that is where Mr. Rowe interprets me as saying that the earth was *third* in the order of creation. I said

Digitized by Google

that "the earth was created on the third day, or period of time," and added that "three operations preceeded this, so making it fourth," while Laplace places it sixth. Granting it to be so, 6 bears such a suspicious relation to 3 that I may allow it to stand over for further investigation. Coming to the radiant tribute to the principle of Tri-unity, which Mr. Rowe reserved for the closing tableau of his remarks, where he lifted the curtain to the musical strains of thrilling Addisonian verse, revealing the Spirit of Tri-unity—triumphant; and disclosing its muse, who has forestalled us in recording its praises in his own immortal stanzas—and now, amid the after-glow of such thrilling effects, I would—before relapsing into the silent oblivion of conclusion—express the hope that those constituting the portentious "We," in those verses (the human race tri-unity of *Men, Women, and Children)* may include all those whose welfare we desire, and who, when the (second) Tri-unity of *Stars, Sun,* and *Nature* are no more, shall still flourish in immortal youth amid the (third) calamitous Tri-unity—*elemental warfare, wreck of matter,* and *crash of worlds.*

Digitized by Google

# ADDENDA, &c.

* The undernoted are the Rules referred to at Page 23, illustrating the peculiar property aud power of the numeral 9, when used as a test of accuracy in calculations.

ADDITION.

| | |
|---|---|
| 156 | 3 |
| 6425 | 8 |
| 789 | 6 |
| 7370 | 8 |

RULE.—Cast out nines from each of the Addenda (cross-wise), writing the "*remainders*" only, to the right of the vertical line, as above, then add these "*remainders*" vertically, and cast out nines from same, also add (cross-wise) the "*answer*" of the sum, cast out its nines, these remainders will agree if the summation is correct (leaving 8 as above).

SUBTRACTION.

| | |
|---|---|
| 68597 | 8 |
| 5646 | 3 |
| 62951 | 5 |

RULE.—Cast out nines from each of the Addenda (cross-wise), writing the "*remainders*" only to the right of the vertical line, as above, then subtract the lower from the upper (if the upper is "*less*" than the lower, add 9 to the upper), the remainder should agree with that resulting from the cross-addition of the "*answer*" with the nines cast out, as 5 in above example, if the working is correct.

MULTIPLICATION.

| | |
|---|---|
| 32645 | 7 |
| 8 | 2 X 8 |
| 261160 | 7 |

RULE.—Cast out nines from the (cross addition of) multiplier and multiplicand, and write the results (8 and 2) in the spaces right and left of a cross, as above, multiply the results (16) cast out nines, placing the remainder (7) in the upper space of the cross, as above—lastly, cast up nines from the cross-addition of the "answer" placing remainder in the lower space of the cross.—The figures in these upper and lower spaces will agree if the working is correct.

*Wilson and Whitworth, Steam Printers, Broadway, Stratford.*

Digitized by Google

# INSTITUTE OF MARINE ENGINEERS,

SESSION 1889.

## FIFTH PAPER.

# MORTON'S
# Patent Reversing Valve-Gear.

BY

ROBERT BRUCE,

(MEMBER.)

*Read Tuesday, 24th September.* *Discussion continued 27th September*

PRICE SIXPENCE.

LEITH:
PRINTED AT THE OFFICE OF "THE STEAMSHIP,'
2 CUSTOM-HOUSE CHAMBERS.

Digitized by Google

Digitized by Google

# PREFACE.

THE LANGTHORNE ROOMS,
17 BROADWAY,
STRATFORD, 27*th September* 1889.

A meeting of the Institute was held this evening, when the discussion on Mr Bruce's Paper on "Radial Valve-Gear," read the 24th September, was continued.

The meeting on each occasion was presided over by Mr Macfarlane Gray.

The following pages contain a report of the proceedings and illustrations reduced from those exhibited on both evenings.

The subject brought forward in this paper is not only of considerable importance from a mechanical point of view, whether considered by engineers in their own interests, as responsible for introducing or working this or any gear out of the common run, or in the interest of steamship owners in addition, as responsible for recommending the adoption of any gear in view of giving more cargo carrying capacity, when first cost economy at the sacrifice of efficiency and sustained economy may be the result.

The subject is also of importance from an educational point of view, as giving opportunities to the younger members of studying principles as well as results.

It is probable, therefore, that another paper on Radial Valve-Gear may be given in the course of the current session.

JAS. ADAMSON,
*Hon. Secretary.*

Digitized by Google

Digitized by Google

# MORTON'S
# PATENT REVERSING VALVE-GEAR.

THE reversing valve-gear which I am about to describe is the invention of Mr Alexander Morton, whose name is well known in connection with his invention of the "Ejector-Condenser," and whose researches in connection with valve motions of many types the writer was, as a pupil, twenty years ago, privileged to take part in. Mr Morton described the nature of this valve-gear in a paper read by him before the Institute of Engineers and Shipbuilders in Scotland, 28th November 1882.

This system of reversing valve-gear is the outcome of many efforts on the part of the inventor to arrange a motion that shall impart to the slide-valve a regular movement in time with the reciprocations of the piston, irrespective of the direction in which the engine may be working—*i.e.*, while the piston moves to and from its central position in the cylinder, so the normal motion of the valve corresponds to the movements of the piston. It is intended to meet the necessities for a good valve-gear in regard to economical steam distribution, ease of handling the engines, either in full gear or when linked up, with due regard to the desirability of reducing the weight, cost, and space occupied by marine engines generally; while it is applicable to all types of reversing engines.

I propose, by means of the diagrams and models, to explain to you the nature of Morton's system of valve-gear, and from these explanations and models you will gather that it belongs to a class of which there are many forms. The original form, however, was published half-a-century ago, and consisted mainly in conveying the motion of the piston and the vibrations of an oscillating cylinder or connecting-rod by two distinct systems of levers, and combining them at a Y

Digitized by Google

shaft. A compound of these two motions was thus imparted to the valve, but without any attempt at uniformity of motion or ease of handling the engines.

Many engineers have engaged themselves in efforts to simplify and improve the reversing mechanism of the steam engine generally, beginning with Punshon, of Blackwall (who was the first inventor of what is now called radial valve-gear), in 1839, the Hackworths in 1848 and 1859, Wyllie and Gray (J. M'Farlane Gray) in 1865, Sulzer in 1875, Brown in 1876, Marshall in 1879, David Joy in the same year, and Morton in 1882, with others between and subsequently, but all more or less working on the original idea developed by Punshon.

Some of the arrangements I have alluded to above were treated by Mr J. T. Milton, in his paper read before the North-East Coast Institute of Engineers, 22nd February 1888, and the numerous polar diagrams attached to Mr Milton's paper exhibit the deficiencies of those arrangements when compared with the improved results obtained from the new features introduced by Mr Morton, as shown by the polar diagrams now exhibited (see Sheet 12, Figs. 11 and 12). The theory of the simple and compound radial gears has also been treated of in "Engineering," September 17 and October 8, 1886.

As the explanation proceeds, however, you will gather that the features which distinguish Morton's system are distinctly original. I shall also state some of the advantageous results from a commercial point of view that are derived by the adoption of this system of valve-gear by marine engineers and shipowners.

In order, then, that the three new features which distinguish Morton's system from the earlier and well-known arrangements may be understood, I beg to draw your attention to diagram Fig. 1, Sheet 1. There is here delineated the cross-head, slide-bar, connecting-rod, and crank of an ordinary steam-engine. On the centre line of the connecting-rod, let us take any *fixed* point. The point assumed in the diagram is in the middle of the length of the rod. On revolving the crank the *fixed* point will describe a figure having the contour of an *unequal-ended* oval (as shown by the full line in the diagram), whose major axis is equal to the length of the stroke of the piston, and whose larger end is next the crank. The dotted line on the diagram represents the contour of an *equal-ended* oval, and the tinted area between it and the oval actually described by the fixed point shows at a glance

Digitized by Google

the inequality in the amount of lateral vibrations of the fixed point, at corresponding positions of the piston measured from opposite ends of the stroke. It is evident that any lateral movements derived from or controlled by the fixed point will be *unequal* for corresponding positions of the piston at opposite ends of the stroke, in agreement with the irregular lateral vibrations of the said fixed point; and the shorter the connecting-rod is in relation to the stroke of the engine the more pronounced will the inequality become. To overcome this inequality, and as a consequence to eliminate the error commonly known as due to the "angularity of the connecting-rod," was the inventor's first aim, and the simple method by which he ultimately overcame the difficulty I shall describe.

Diagrams Fig. 2, Sheet 1, and Fig. 3, Sheet 2, are repetitions of Fig. 1, except that in both the former there is the connecting-rod a slot in which is fitted a *movable* block carrying the centre A, and Figs. 2 and 3 show respectively two of several methods of imparting to the point A a travel relatively contrary to the direction in which the connecting-rod may be moving. The result of this relatively contrary travel, when properly proportioned, is, that the MOVABLE point A vibrates *equally* across the centre line of the engine for equal amounts of travel of the piston from opposite ends of the stroke; in other words, the point A now describes a *regular* or *equal-ended* oval figure, whose major axis is a straight line, and (in the case delineated) about three-fourths the stroke of the piston in length, the minor axis being an arc of a radius equal to the length of the actuating link B. It follows that any lateral movements derived from or controlled by the *movable* point A will be *equal* for corresponding positions of the piston, measured from opposite ends of the stroke.

Now, in preference to allowing the *movable* point A to slide as a block in a slot in the connecting-rod (an arrangement which would in practice have certain obvious disadvantages), the point A is made to form the oscillating centre (or crank-pin) of a small crank P vibrating in a bearing formed in a projection on the connecting-rod (Fig. 4, Sheet 3), and so proportioned as (with the proper amount of relative travel imparted to it) to vibrate equally across the centre line of the connecting-rod. The result is that the figure described by the *movable* point A retains all the characteristics already described, but the major axis of the figure becomes the arc of a circle, as shown by the diagram.

Digitized by Google

The model here will explain this motion at a glance, and it will be observed that, whether the connecting-rod vibrates to the right or left of the centre line of the engine, the movable point A remains practically stationary in relation to the centre line of the connecting-rod. I should here explain the different methods of imparting the correcting movements to the *movable* point A. In the case of outside cylinder locomotives and stationary engines, and generally, where single cranks are used, the method indicated by Fig. 2, Sheet 1, is that usually adopted. Here the point A is connected by means of the link B with the overhung or return crank E on the main crank-pin of the engine. In marine engines the point A (see Fig. 3, Sheet 2, and Fig. 4, Sheet 3) may be connected by means of the link B with the point D in the lever E. This lever E may be an air-pump lever. The point D *must* vibrate *equally* across the centre line of the engine as the piston moves from one end of its stroke to the other, in order that the requisite uniform geometrical movement may be imparted to the *movable* point A. A third method, being that more commonly adopted in marine and double-cranked engines generally, is shown by the large model and by Fig. 5, Sheet 4, and Fig. 6, Sheet 5, and consists in imparting the correcting movement to the radiating crank-pin or *movable* point A, through the prolongation of the valve lever F (the description of whose functions I must here anticipate), connected to the piston-rod crosshead at D by the link B.

Now, if a lever F (Fig. 4, Sheet 3), having a radius equal to the major axis of the oval figure, be connected at one end to the point A, and at the other end to the link C radiating from a fixed centre K, the length of the link being equal to the radius of the minor axis of the regular oval figure described by the point A, the lateral vibrations of the link C will correspond exactly with the equal and regular reciprocations of the piston from either end of the cylinder, as shown by the figures on the slide and the crosses on the radius of link C, and this quality of motion will be maintained *irrespective of the direction in which the engine may be rotating*—a result obtainable by no manipulation or proportionating of the mechanical members constituting any other known system of valve-gear.

If attention be particularly directed to the crosses referred to, it will be noticed that they mark the positions attained by the end G of the lever F upon the arc swept out by the link C, when the piston is at those points in its stroke indicated by the corresponding numbers,

Digitized by Google

and it will be seen that for equal distances travelled by the piston from either end of its stroke, the point G must always return to the same position, and that this is true for either direction of running.

I desire to ask your particular attention to the *movable* point A actuated as shown, and before described, for it has important properties and forms the basis of Mr Morton's improvements. The advantageous distribution of steam claimed for this valve-gear is the outcome, primarily, of the action of this point upon the members of the system constituting this new gear. For instance, by giving the movable point sufficient relative motion the normal pear-shaped figure becomes not only corrected, but *over-corrected*—in other words, turned upside down, the larger end now being towards the cross-head; whilst, on the other hand, by reducing the relative motion of the *movable* point A, the correction thereby imparted to the normal figure may be correspondingly reduced.

We can, in fact, by increasing or diminishing the relative *travel* of the movable point A, obtain any changes we please in the *lateral vibrations* of the said point across the centre line of the engine, for corresponding movements of the piston from opposite ends of the stroke, and consequently (the mode of correction enabling us to make that half of the orbit of the movable point A which lies towards *either* end of the stroke—no matter which—longer than the other) can give the point A a longer path to traverse during one half the revolution of the engine than during the other half now, as the period during which the ports remain open is dependent upon the movements of the point G Fig. 4, Sheet 3, and Fig. 5, Sheet 4, (usually called the "fulcrum centre" of the valve-lever F); and since the movements of the point G are controlled by those of the point A, it follows that by slightly *over*-correcting the normal figure described by the movable point A we are able, if required, to obtain what is often considered desirable in vertical marine engines, namely, a longer *period* of steam admission on the *up* stroke than on the *down*, and that *for either direction of rotation*, and for any intermediate grade of expansion, but without disturbing the uniformity of the valve's movement on either side of its central position, or the equality of port opening at both ends of the stroke.

The result of distorting the normal oval figure, by giving the movable point A either more or less relative travel than is just required to produce equal lateral vibrations of the said point for cor-

Digitized by Google

responding positions of the piston measured from either end of the stroke, will be, that the crosses indicating successive positions of the point G will be intersected not only by the circular arc of radius C, but by an angled ogee line (Fig. 4[1]), which will be as *a b* when the relative travel of the point A is too small, or as *c d* when that is too great, the proper movement accompanying exact correction of the lateral vibrations of the movable point A *alone* giving the single true circular arc, which must be followed by the fulcrum centre G in order to produce equality of port opening at both ends of the stroke, independent of the direction in which the engine may be rotating.

This compensation for the inequality of the lateral vibrations of the connecting-rod is perfectly effected by the Morton system alone, and the resulting uniformity of motion of the point G, in a constant path, in time with equal and regular reciprocations of the piston, irrespective of the direction in which the engine may be rotating, confers upon Morton's valve-gear distinctive features as compared with all others. Thus, whereas eccentric gear imparts to the valve a movement derived from, and, therefore, in time with that of the *crank*, Morton's gear disregards the crank and its irregularities of movement in relation to the piston, and gives the valve a movement in time with the reciprocations of the *piston* alone.

Again, it is understood that with ordinary eccentric gear, or any other known types of radial gear, any required distribution of steam may be obtained for *forward* gear, but the new features which Mr Morton has introduced, afford the only means yet discovered of enabling the designer to retain, both in backward gear and proportionately in any intermediate grade of expansion, those characteristics of steam distribution which he has set himself to obtain for forward gear. It is this unique feature which gives to Mr Morton's invention its distinctive character and value as a reversing valve-gear, in comparison with all others.

So that now we have before us the simpler means devised by Mr Morton whereby the fulcrum centre G of the radial valve lever F (see Fig. 5, Sheet 4) has imparted to it a uniform motion in time with that of the piston, and in a *constant* path, which forms the second new feature of the invention. The valve lever F, as in the original motion and in all the subsequent forms of this class of valve-gear, has a short overhung end, G N, so proportioned as to give the centre N

Digitized by Google

a travel (at right angles to the path of the fulcrum centre G) equal to the sum of the "lap" and "lead" of the slide-valve; but the means employed by Mr Morton to connect this centre N with the side-valve, so that the engine may be reversed quickly and easily, is a strikingly simple and novel invention. It forms the third feature in the arrangement; and when all three new parts are combined in one engine the full benefit of these improvements may be realised.

This third feature in the new gear I shall now describe. It is clearly illustrated by the model and drawing, Sheet 4, Fig. 5, and consists in adopting the adjustable link H, one end of which is connected with the overhung centre N of the valve lever F, the other end being connected with the block or die J in the slotted quadrant I, which is made in the shape of the letter T inverted, its stem being in line with and rigidly connected to the valve spindle Q. A vibrating T-piece quadrant may be substituted for the one just described, which, however, is the most desirable form of this member of the new system. The bracket $D^1$ attached to the bottom of the cylinder carries a long and firm guide for the stem of the quadrant, and has arms cast on its sides, into which are fitted bearings for the fixed centres K of the vibrating link C. When the adjustable end of the link H is in the centre of the quadrant, the valve receives a travel equal in amount to its total "lap" and "lead," which is constant, while for combining "port opening" with lap and lead for any grade of expansion it is only necessary to shift the link H, and with it the die block J, along the slot in the quadrant to the right or left of the valve spindle, for either forward or backward gear, as the case may be. The die blocks are solid and unadjustable, having no "slip" or motion to speak of, they work for years without material wear. Sliding surfaces are entirely dispensed with, and beyond the adjustable link H, all the centres of the motion travel in *constant* paths, and are not affected by any variation in the direction of the engine's rotation.

I should, perhaps, here remind you of the well-known "Hackworth" method of reversing—viz., by means of the angled cross-slide or swing-link, where the valve lever is actuated either by an eccentric or counter crank, as shown by Sulzer in specification $3170^{76}$, or from the connecting-rod, as shown by Brown in his specification $3176^{76}$. The fulcrum centre of the valve lever slides or swings in a different path when the engine is in forward gear from that when in backward gear, and consequently the "port openings" for different directions

Digitized by Google

of running vary at the opposite ends of the cylinder on account of the varying paths of the fulcrum centre of the valve lever. Hackworth's system of reversing the direction of rotation was first combined with non-eccentric valve-gear, I believe, by Mr C. Brown; and in his patent specification he speaks of his valve-gear as one of the "Hackworth class."

I now ask your attention to some of the results obtained in the application of the Morton system of valve-gear to marine engines. Permit me, in passing, however, to call your attention to Sheet 8, which represents indicator diagrams enlarged from scale $\frac{1}{20}$th of an inch = 1 lb. to $\frac{1}{5}$th of an inch = 1 lb. pressure of steam.

These diagrams show the steam distribution for both directions of running from full gear to cut-off at $\frac{1}{12}$th of the stroke in a pair of coupled horizontal winding engines, having cylinders 24 in. diameter, by 60 in. stroke. This high range of cut off is carried out *without the aid of a separate expansion valve.* The engines were erected in November 1884, for Messrs Young's Mineral Oil Company, at their mines, Newliston, near Edinburgh. The Morton valve-gear on these engines has worked without adjustment night and day since the engines were started in 1885. When the writer visited the engines a few months ago, in company with other engineers (for whom he is now arranging new paddle-steamer engines for the adoption of the Morton gear), the evidence of such lengthened service was barely perceptible on the various centres.

Sheet 9 represents indicator diagrams taken from the triple-expansion engines of the Inman and International Steamship Company's s.s. "Ohio," a vessel 343 × 43 × 34·6. In this case the original engines which indicated 2100 H.P., were of the compound class, fitted by Messrs Cramp & Co., of Philadelphia, U.S.A. These engines, with their boilers, were removed and replaced by new boilers and three-crank triple-expansion engines, indicating 2200 H.P., by Messrs James Howden & Co., of Glasgow, and were the first marine engines fitted with Morton's system of valve-gear. Fig. 6, Sheet 5, shows a design practically identical with that used in this case. The net result, so far as the saving of space occupied by the new propelling apparatus is concerned, is that the carrying capacity of the vessel was increased by several hundred tons measurement, which represents a very largely increased freight-earning capacity, and points owners of steamers

Digitized by Google

fitted with the old type of compound engine to a substantial source of profit, as we shall see further on. The superintendent engineer of the Inman Company, Mr James S. Doran, informs me that during the time the gear has been in constant use—since July 1887, the engines have steamed over 120,000 miles—the upkeep of the valve-gear has been practically *nil*.

The engines of the s.s. "Circe," a vessel 331·9 × 35·7 × 26·4, were built by Messrs Barclay, Curle & Co., of Glasgow, to replace the ordinary two-cylinder compound engines with which the ship was originally fitted; and as the desire of the owners, Messrs Donaldson Brothers, of Glasgow, was to put the new engines into the same longitudinal space as taken up by the old engines, the builders were called upon to design the new engines to meet these requirements. The old engines had 37 in. and 74 in. cylinders, and 48 in. stroke, with ordinary valve-gear, and the new triple-expansion engines on three cranks have 25 in., 41 in., and 68 in. cylinders, and the stroke is the same as in the old engines, 48 in., with Morton's valve-gear. The result of the refit, so far as longitudinal space occupied is concerned, is that the new engines have been placed on the old engine-seat, and they, with their boilers, now occupy 6 ft. less longitudinal space than the original ones required, with an increase in power of 900 I.H.P., the new engines being capable of developing over 2100 I.H.P., with the pistons of the engines running about 630 ft. per minute.

To meet the circumstances and requirements of such cases the engines have to be arranged so that they shall occupy the smallest possible space beyond what is necessary to accommodate cylinders of the diameter required for the power that has to be developed. Duplication of crank shaft, with very large bearing surface, as well as a full degree of accessibility to the moving parts, is insisted upon. The cylinders are arranged as close together as the flanges of the low-pressure and intermediate-pressure covers will permit, the valves are brought round to the front, and on the cross-centre line of the cylinders, the exhaust being carried round by a belt to the back. On the driving columns is provided an interior water circulation for keeping the "ahead" working face cool.

The high-pressure cylinder has a piston valve fitted, the other two ordinary double-ported slide-valves. The valve casings of the low-

Digitized by Google

pressure and intermediate-pressure cylinders have each doors on the top and front, which permit of the valves being drawn either way when required. The wrought iron columns in front of the engine are made with flanges top and bottom, and secured by bolts to corresponding flanges on the cylinder bottom and sole plate. Fig. 6, Sheet 5, shows a general front view of this type of triple-expansion engine, and may be taken as representing the arrangements I have carried out in the larger triple-expansion engines now being built and fitted with Morton's valve-gear in the Clyde district. It will be seen that this design leaves the whole of the working parts of the engine open and accessible, and within view of the starting platform, the valve-gear being at the side instead of in between (or on any angular cross line through) the engines, thus affording a free passage from back to front of the engines. Sheet 10 represents indicator diagrams taken from the "Circe."

In all cases where Morton's valve-gear is fitted a short valve travel is arranged. This short travel reduces the mean speed of the valve in proportion to the reduction of travel, and consequently reduces the valve resistance, which, with the old link motion, its cumbrous eccentrics, heavy valves, and long travels, evidently absorbs no small percentage on the engine's power.* Again, it may be pointed out that whilst, in the case of common eccentric-gear, the power required to move the valve acts directly on the valve rod, and consequently at a disadvantage as regards leverage, in the case of Morton's gear a comparatively insignificant power is required, owing to the great leverage obtained through the ratio between the two arms of the valve lever F. Nor is any appreciable strain thrown on the connecting-rod, the whole weight being carried, and the driving effected through the frame composed of the links H, C, B (which latter drives) and the valve lever F, the crank P acting simply as a radius bar in the parallel motion. That no part of the system incurs any undue strain is proved by the fact that through many months, and even years, of constant work, the wear and tear is found to be practically *nil*. The detail of the valve-gear needs no explanation, beyond what is contained in the drawings Fig. 5, Sheet 4, and Fig. 6, Sheet 5, it is so simple, easy of manufacture, and light, but withal substantial.

Diagram Fig. 13, Sheet 12, is a graphic delineation of the steam distribution, and shows the port openings in relation to the movements

* See Messrs Marshall & Weighton's Paper, North East Coast Institute, of Engineers, April 21, 1886.

Digitized by Google

of the piston; while Figs. 11 and 12 show the valve movements in relation to the crank. Both figures have the same characteristics, and prove the uniformity of the valve motion; they also show how rapidly the port opens full to steam and how it dwells in mid-stroke. It will be noticed that the "Polar" diagram shows that for forward or backward gear there is equal port opening, and both diagrams prove that there is a longer period of admission on the up stroke than on the down, with the valve moving equi-distant on either side of its central position, but without double porting one end of the valve and face, or arranging unequal travels, as is not an uncommon practice with the users of some forms of radial valve-gear. In comparison with the familiar polar diagrams of eccentric valve-gear, the marked absence of "wire-drawing," indicated by Figs. 11 and 12, in both the opening and closing of the ports by Morton's gear, will be noticed. The whole of these diagrams demonstrate that although the mechanical members of this motion are old and familiar, yet their geometrical functions are novel and unique, and that the useful effects resulting therefrom directly tend towards a greater efficiency (and consequently a pecuniary gain in every revolution) of the engine. The uniformity of the steam distribution in either direction of rotation is a matter of great value in ships of war, or in vessels that require to be frequently and smartly handled.

I have been favoured with information from Mr James Gilchrist, of Messrs Barclay, Curle & Co., builders of the "Circe's" engines, to the effect that they have found the weight of the "Circe's" propelling apparatus (which developed on trial a maximum I.H.P. of 2103), to be 387 lbs. per I.H.P., and the mean weight of five sets of triple-expansion propelling machinery of the same power, built with ordinary valve-gear, to be 432 lbs. per I.H.P. In other words, the marine propelling apparatus of this type, when the engines are fitted with Morton's gear, is power for power about 40 tons lighter than when fitted with ordinary link motion. In both cases the weights given include engines, boilers, shafting propeller, floors, gratings, water in boilers, and piping—the boilers working with natural draught.

I am well aware that it is possible, with ordinary eccentric valve-gear, to effect a saving both in weight and space in proportion to power, equal to that just named, by either the adoption of a very light type of engine, or by the use of forced draught, or by both these means combined, as is the frequent practice in the navy; or, as to space, in

Digitized by Google

a more or less degree by placing the valves on an angular cross line through the engines, actuating them through rocking-shafts. But I am now speaking more particularly of ordinary merchant steamships using natural draught, and whose engines are built to stand the continuous wear and tear and heavy strains of long ocean voyages at all seasons of the year. In such vessels, saving of weight, however desirable, must involve no reduction of rigidity or strength in any part, but, at the same, every foot of room saved is of commercial value, as I shall presently endeavour to show.

Now let us consider what is the commercial value to shipowners of this new type of engine which is developed by the invention I have the honour to bring before you.

Take first the saving in *weight*. As an authority for some of the following statements, I quote from the paper read by Mr F. C. Marshall, of Newcastle-upon-Tyne, before the Institute of Mechanical Engineers, August 1881, and again from the same author conjointly with Mr R. L. Weighton, M A., in their paper read before the North-East Coast Institute of Engineers, April 21st, 1886.

In these papers it is set forth that the best shipping authorities reckon every ton of deadweight capacity at an average freight-earning capacity of £10 per annum. During the discussion on the latter paper (1886) it was pointed out that a fair weight for ordinary merchant marine engines of the triple-expansion type, indicating 2000 H.P., with boilers and outfit complete, averaged 450 lbs. per indicated horse-power.

As before stated, the "Circe's" propelling machinery, with engines the same as illustrated by Fig. 6, Sheet 5, boilers, water, and outfit complete, weighs 387 lbs. per indicated horse-power, showing a gain on 450 lbs, per indicated horse-power of 63 lbs., or 14 per cent., giving an increase in the carrying power of the vessel equal to 55 tons deadweight; therefore, the money value of this is 55 × 10 = £550 per annum profit to the shipowner due to reduced weight of engines of the "Circe" type.

To this important item of gain falls to be added that derived from the saving of *space* effected by the "Circe" type of engine The cubic space saved will evidently be greater (per foot of length saved in the engine-room) in vessels of great beam and depth than in those of

Digitized by Google

narrow beam and shallow draught; but as an example, I will take the case of a large first-class steamer now building for the Eastern trade, having dimensions 412 × 46 × 29 feet. By the adoption of Morton's valve-gear, the engine-room will be four feet shorter than it would have been with the old type of engine. This means 46 × 29 × 4 = say, 130 tons measurement.

Taking this 130 tons at deadweight value—viz., £10 per ton per annum = £1300 additional earning power gained to the ship, *plus* the freight-earning power gained by reduced deadweight in the propelling apparatus. All this is being effected without any additional cost in the working or management of the ships to which Morton's valve gear is being fitted.

These advantages are being recognised by many eminent firms, amongst others the well-known "City" Line, who, under the superintendence of their engineer, are adopting Morton's valve-gear for their new steamers now building, thus ceasing to burn fuel for the purpose of carrying round the world year after year, during the life of their vessels, an entirely superfluous weight in the propelling apparatus, and also securing a substantial increase of freight-earning capacity by converting what under the old conditions would have been engine-room space into cargo-carrying space.

I ask your attention to Sheet 7. The top drawing, Fig. 8, represents the crank shaft proposed for a large steamer of 4500 tons register, and was designed to be interchangeable, with six bearings and ordinary valve-gear. Morton's gear is being fitted instead, and the shaft, as shown in Fig. 10, is substituted for Fig. 8, being 4 ft. 3 in. shorter and fully 11 per cent. lighter—the weight of Fig. 8 being 19 tons 8 cwt., and Fig. 10, 17 tons 13 cwt. The style of shaft shown in Fig. 10 has been adopted in most cases hitherto where Morton's gear is fitted, with the excepion that some have been coupled at the crank pin. In the case shown, the coupling is effected in both webs of the middle crank, the end lengths of the shaft being interchangeable. The shafts when coupled and in place have a strong and effective appearance, the whole shaft, excepting the pins and webs, being covered in the main bearings. This type of shaft permits of an unusually large and effective bearing surface in proportion to the power developed, the shaft shewn in Fig, 10 having 120 in. total length of bearings, as against 108 in. in the

Digitized by Google

longer shaft (Fig. 8), so that the reduction in length of shaft does not involve any sacrifice of bearing surface.

In the conversion of existing compound engines to triple-expansion, the advantages of this improved form of radial valve-gear become manifest. It has been adopted by the "Allan" Line at Glasgow, in the S.S. "Waldensian," and in the S.S. "Strathleven," now being tripled by Messrs A. & J. Inglis, of Glasgow; and by the "Clan" Line Company, in steamers whose engines, previously compound, have thus been tripled. Sheet 6, Figs. 7 and $7^1$, explains this arrangement. The low-pressure cylinder is lined, or the original high-pressure cylinder replaced, as the case may be, and a new bed plate—in fact, a new engine—put on the former end of the existing one, the old reversing shaft connected to the new, and the valve of the high-pressure cylinder placed at the back or front as circumstances dictate. In this case it is to the back, and a cast iron column is erected in the front, forming a slipper guide, the whole arrangement making a compact and tidy job, while not necessitating any increase in the original engine-room space.

Sheet 11 is an enlarged Indicator diagram from high-pressure cylinder of S.S. "Clan Gordon," Morton's valve-gear.

---

The foregoing description is only intended to convey a general outline of the new geometrical features and improved steam distribution, with accompanying commercial advantages, which Mr Morton's invention has introduced into the reversing steam engine. A more complete analysis, bearing especially on locomotive practice may be offered later on.

---

## Mr ROWE'S REMARKS.

I shall be very glad to say a few words. I have been much interested with the lecture to-night. It has been very instructive, and our interest will be increased, I think, when we have examined the plans and models before us.

Digitized by Google

With regard to the remark that shortening the engine-room would save several hundred tons of cargo space, this evidently depends solely on the size of the vessel. In a small vessel the saving would be but small, whilst in a large vessel it would be great, necessarily arising from her depth of hold and beam. In reference to the saving of this, was the lecturer taking Morton's or Joy's gear into consideration? and was he comparing either to triple-expansion engines fitted with common valve-gear?

With regard to weight, I think Mr Marshall, of Tyneside, can develop one horse-power to every 300 pounds.

As this valve-gear has such a multiplicity of part, I think there might be some slight trouble with it at the commencement, but this no doubt would soon be overcome. I am afraid that we all aim at simplicity too much, and leave out the chief object—perfection. To gain this latter point, I do not think we can do better than go to the human frame, which is perfection itself, each part being specially adapted for the work it has to do. Simplicity of parts is of course desirable, but scientific progress must not be restricted to the capacity of the practical engineer.

---

## Mr THOMSON'S REMARKS.

I would like to ask one question. In the ordinary Stephenson motion, when you work with the gear linked up you alter your lead. Does it do so in Morton's? Is there an advantage in having a constant lead? I have found that towards the end of a long voyage, when the bearings had worn a good deal and the engines consequently getting rather noisy, we could lessen the vibrations and soften the noise by linking back, and thereby altering the lead and compression.

---

## Mr HAWTHORN'S REMARKS.

I regret very much that I was not here when the paper was read, but, looking at the diagrams, I should think that this gear would necessitate having a stronger connecting rod. Now, this excessive

Digitized by Google

weight being put into the rod will have to be accounted for in some way. We have all had practice with the link motion, have had to accommodate ourselves to it, and have got such a thorough knowledge of it, that we have become conservative, as it were, and feel that we shall never be able to dispose of it. With reference to this gear *during* a long voyage, owing to the joints getting slack with the wear of the pins, I fancy there will be not only a good deal of noise and vibration, but also of trouble in the handling of the engines when the sum of the wear is considered. How many governors have we had experience of which fail to do their duty, owing chiefly to the number of the small joints and pins? I believe it will undoubtedly run well when you try it, when all the joints are in good order. But how about its actual work at sea? I am of opinion that the gear will not work so satisfactorily, and it strikes me that it will hardly overcome the simplicity of the link-gear.

---

## CHAIRMAN'S REMARKS.

By way of reply to Mr Hawthorn, I may read the following excerpts from letters, concerning the practical value of Morton's valve-gear, which have been addressed to Mr Bruce by the Superintendent Engineers of the "Inman and International" Steamship Company, and of the "Clan" Line Steamship Company.

Mr J. S. Doran writes on the 17th January 1889, as follows:—"The 'Ohio' has just sailed for New York, I think, on her fourteenth "or fifteenth Atlantic voyage. Upkeep of valve-gear has cost "practically nothing; wear and requirements for adjustment very "trifling. It is a good gear, and I have no hesitation in recommending "it to engineers and shipowners."

Mr John Lyall, on the 11th September 1889, writes:—"With "reference to the valve-gear as fitted to our steamer, I am pleased to "inform you that it is doing all I expected it to do, and am quite "satisfied that it is the most suitable valve-gear that can be made. "The expense of upkeep is as yet nothing."

Digitized by Google

## Mr JAS. ADAMSON'S REMARKS.

In reference to the claims advanced in favour of radial valve-gear, there are a few points I would call attention to. The shortening of the engine-room is not an unmixed good, even although the crank shaft bearings are made with ample surface. I have no doubt that many here present will agree with me in saying that the engine-rooms, as a rule, are quite short and close enough already, without having them still further reduced on the plea advanced by advocates of any gear. I think it is well, however, that the author of the paper has kept before him the importance of maintaining the view that short bearings on the crank shaft should be discouraged.

I think Mr Rowe is correct in surmising that the weight per indicated horse-power given by Mr Marshall and my esteemed friend, Mr R. L. Weighton, can hardly be taken as for the average merchant steamer. I have been running up roughly a few engines—compound, triple, and quadruple—and find that they work out to about 380 to 400 lbs. (according as they may be fitted with single or double guide columns) and 400 to 416 respectively per indicated horse-power, and this includes the whole of the propelling machinery, boilers filled, and all ready for sea.

The author deserves great credit for the paper he has read, and for the excellent diagrams and models he has brought before us to-night, and I am pleased to say that one of the best of the models has been presented to the Institute.

I would propose that another evening should be appointed for an adjourned discussion, when Mr Joy, who is unable to be present to-night, being detained at the trial trip of one of Her Majesty's steamers, may be able to come and take part. This, at the same time, would give an opportunity to members of thinking over the paper, and studying the diagrams before the discussion.

Digitized by Google

# RADIAL VALVE-GEAR.

## *ADJOURNED DISCUSSION ON MR BRUCE'S PAPER.*

**FRIDAY, 27th Sept. 1889.**

### CHAIRMAN'S OPENING REMARKS

(Mr J. M'FARLANE GRAY).

Before opening the discussion I may recapitulate the principal points in the discussion when the paper was read. Inventions such as these before the meeting seldom came forward as the production of one mind, complete in their finally approved form. Valve-gears, dispensing with one or both of the eccentrics, have been put forward from time to time for thirty years or more. In the ideas floating about so long there were all the parts of the skeleton of a good gear without eccentrics, and it appears to me that Mr Joy recognised this at the right time, when the triple-expansion engine was wanted to replace the compound engine without extension of engine-room space. Joy's valve-gear is an improvement on what preceded it, and Morton's is said to be an improvement on Joy's, and with all the beautiful diagrams and working models now produced for your instruction, I do not think it unlikely that still further improvements might be made upon what is now before us by some member of this Institute. This adjourned discussion has been arranged for principally to give Mr Joy an opportunity of explaining his gear to the members; and if Mr Bruce has anything further to explain I will ask him to do so now; if not, I will call upon Mr Joy to speak.

Digitized by Google

## Mr BRUCE'S OPENING REMARKS.

I have little to add to what is stated in the paper, and at the last meeting; but in response to the chairman's invitation, I may say in the first place that the statements in the paper as to dead weight saved are based on very careful comparison between ordinary merchant marine triple-expansion engines fitted with "link-motion" and engines of the "Circe" type, fitted with Morton's system of valve-gear.

The chairman has referred to the question of priority of invention. Although fully prepared to deal with this subject (documents referring to which I have brought in case of necessity), I feel this is hardly the place to enter upon a discussion on this point, but would simply state that in Morton's system there is *nothing* in common with the Hackworth or the Joy designs, but what was public property years before the date of Joy's patent, as the diagrams and paper will make clear to those acquainted with these latter systems. The backbone, as the chairman has aptly termed it, of the radial connecting rod system of valve-gear, must be made right before the details are built upon it, and this is what Morton alone has done. The Hackworth system is one thing, and Morton's is another; but the results from Hackworth's and Joy's systems are similar to one another, and very different (as an inspection of the further tables I have prepared at once shews) from those obtained from Morton's gear.

---

## Mr JOY'S REMARKS.

I very much regret that I was detained by an important engagement (a Government trial trip) from being present to hear this paper read, and I further regret that I have been unable to get a copy of the paper till just before the commencement of this meeting, so that I have not even had time to skim it over, and although I am very familiar with the general question of radial gears, to the exact method of treatment in this paper I am a comparative stranger.

However, as your committee have thought fit to adjourn the discussion, and as my name appears in the card convening the meeting as expected to speak on the subject, I obey the call, and will give you any information I can on radial gears from my own point of view and from my own experience on the subject, which now extends over some years

Digitized by Google

and a very large and varied installation of the system. My own investigations on the subject commenced as far back as 1868, when I was endeavouring to design an overhead marine engine which would lie in the shortest space in the ship, and this could only come by bringing out the valves from between the cylinders and placing them in front athwartships, here the evident source of motion for the valves was the air-pump lever or the connecting rod, hence the radial gear that came of my scheming in this direction. It was not till '78 and '79 that I got the plan into sufficiently practical form, and secured my patents early in that year. Mr Marshall's gear followed immediately, and I was told by some of my alarmist friends that this would be against my success; but my answer was that there was room for a good many more than myself to meet the very strong and well-founded prejudice that existed and still exists in favour of link-gear, a good and tried system, certainly, not to be abandoned, except for good reasons. Now since my system has come out, and has proved itself a success, it has been subject in some quarters to very severe strictures, and indeed practical opposition.

On some of these points perhaps it is not out of place here to say a word or two.

First of all, as a practical and very solid proof of its general suitability for the work for which it was designed, I may mention that I have something over 200,000 indicated horse-power running and coming forward, in marine engines, and about 1200 locomotives—75 per cent. of which are high type express engines for passenger and goods service, drawing the greatest weights and at highest speeds.

I claimed for my system when introduced to the public at the Summer meeting of the Mechanical Engineers' Institute at Barrow in 1880—where it was illustrated by an express goods locomotive specially built by the London and North Western Railway to test the system—that it is simpler, less costly, and more correct in action, and allowing, all round, larger bearing surfaces than the *link-gear* (accepting *that* as the standard gear then the property and the pet of the public), and, that in marine engines it specially saves room and weight, and so cost, allowing a shorter engine-room,—leaving more space for cargo.

It has been objected that there is friction in my system, employing the quadrant and block, and that the gear does not get a perfect back-going distribution of steam. This friction objection does not exist

Digitized by Google

in fact, given a good design, material, and workmanship; then sliding surfaces are no trouble. What reasonable engineer would lift up his voice against the slide-bars for piston-rod cross-heads, or attempt to replace them by a parallel motion? As a fact these blocks and bars run for years without lining up. I examined four sets of triple engines this Spring, which had been running continuously for four years, only one, out of the twelve sets of gear had had one block lined up, all the others were perfect; I could not insert the point of my pocket-knife between the block and bar. Locomotives continually run four or five years and are not touched, they have no means of letting together, and most of my engines are doing very fast and heavy work.

As to this back-going question. My gear gives quite equal cut-off, the port opening only varying, in favour of the lifting stroke, which has a wider opening than for the falling stroke, and this is an advantage if it is anything. But I hold there is nothing in it, for both ports are open enough, the one being opened a little further makes no difference, and this is proved by the set of diagrams I show taken from engines 1850 indicated horse-power, where it was convenient to employ the back-going for running ahead, there is not 1 per cent. difference among the set of diagrams. But what should happen if the bottom port opens fully and the top not at all, indeed if there were no top port, this would surely be very unequal distribution of steam. Yet I have known such engines in Channel steamers, and they did as well as sister ships with ordinary engines. I may add that all these diagrams were furnished to me, and not taken by me. But suppose there were anything in it! What is the amount of work done back-going? I have got the statistics from a well known American line owning some of the very largest ships, and while the revolutions *forward-going* in an Atlantic voyage vary from 950,000 to 1,100,000 according to the size of ship, the *back-going* are but 2000 to 2500, and that only turning "easy" into port and "burning down" fires. If a perfect port opening is worth anything, what is it reduced to by this calculation? Therefore I think I have proved that this question of exact steam distribution for back-going is of no practical importance whatever, and certainly not worth paying for by the slightest increase in complication.

The principle I placed before me in designing my gear, and have always kept before me, is that a refinement in design with a view to obtaining a saving in the third or fourth place of decimals is a retrogression in practical advance and not an improvement, and it is due

Digitized by Google

to the extreme simplicity of my gear, and the fewness of parts, that it has won its success on engines of the locomotive and torpedo class, and the same tells of Marine Engines, especially of the larger and faster types which are now coming so much into use, particularly in war ships.

I have now answered shortly, some of the leading questions about my own gear, but as I find, notwithstanding its considerable adoption, it is not generally understood, I shall be happy on a future occasion to read a paper on it, and by illustrations with models, to make it perfectly clear. I wish it to be very clearly understood that I am not here with any intention of running down any other gear as has been done by some, there is plenty of room for all if the prejudice for eccentrics and link-gear is to be met, and I have plenty to do to look after my own work. But as the question of priority and patent rights has been referred to (though this is not the place to discuss it), I most unhesitatingly refer any gentleman wishing information on these subjects to the Patent Records. As regards priority, there is no question, as my patent stands first by many years. As to the questions of similarity, I am advised by the highest legal authorities that my own specification will stand any investigation to any extent against all comers, and will be found further to cover some of those following it.

I have introduced my gear into America, and they are now using it in some of their locomotives and also in Mr Vanderbilt's yacht and other ships. It is not necessary for me to say my gear was in use in 1879. It has been running ever since.

Mr HAWTHORN—I should like to hear some one who has been shipmates with radial gears tell us how they work, and how they work with heavy racing; if the gear runs well when it is going at 400 ft. per minute, and is suddenly put to run 800, do they still work in a satisfactory way? It would be much more to our advantage if we had some one here to speak who has had to look after the engines. If this gear runs, and runs well, then I think it is an advantage and we should all adopt it, but if it runs badly, then I say down with it. Can Mr Bruce tell us what practical benefit we get from Mr Morton's arrangement of gear over Mr Joy's gear, and what from an equal distribution over an unequal distribution of steam? It appears to me you are both on an equality so far as going ahead is concerned, and what we want to know is the difference between Mr Joy's and Mr Morton's gear when going astern—if there is any gain, and if so, how much.

Digitized by Google

Mr JOY—In answer to Mr Hawthorn's question as to backgoing, I thought I had already made that clear in my former remarks. First, I showed that with my gear going backward, I get an exactly similar and equal indicator diagram as for forward going, and for up and down stroke too, the correct cards are shown; 2nd, that if this were not so, I shewed that engines running with so unequal a distribution of steam, as none on the top, and full steam on the bottom, it made no difference in consumption from ordinary engines. 3rd, I shewed by statistics that the amount of back running is such a small fraction as against forward going that it is not worth while adding complication to gain perfect distribution, even if it were a considerable advantage, which it is proved it is not.

Then referring to the Chairman's remarks on the general question, after he has placed the whole before us in a nutshell in his usual terse and graphic fashion, there is left little more for me to say, except to recapitulate that it was, as he said, during these 11 or 12 years when I was working towards the question of radial gears, that there was a general idea floating as it were in the air, and many inventors were in a way conscious that a better valve-gear was to be arrived at to meet the demand raised by the enlarged powers and accelerated speeds coming into use; and that in the course of my researches it fell to my lot to work out the practical form in which that valve-gear was first to come out, as he said that "I hit upon the nugget," as has indeed been proved by the large adoption of this system.

Mr ROWE—When I was in the North I saw one or two ships fitted with Joy's gear, and I think that it is as strong and substantial a gear as I have ever seen fitted. I believe, however, that some gear fitted in the Navy gave trouble a little while ago. Perhaps Mr Joy will explain.

Mr JOY—This was only a report about H.M.S. "Amphion" which got into one of the papers, and when I went to the Government to enquire I found it was nothing at all to do with the valve-gear, but a slight breakdown of pump-gear; and on going to the editor of the paper I found the paragraph had got in without his knowledge, he professed himself sadly cut up about it, and offered every possible amend in his power.

CHAIRMAN—Do yon find any difficulty with early cut-offs with your valve motion as is sometimes found with the older motions ?

Digitized by Google

Mr JOY—In answer to Mr Gray's question, I do not find any difficulty in running even with very early cut-offs with my gear, as the compression does not increase with the cut-off in anything like the same ratio as it does with link-gear. I regret that I have not with me a series of indicator cards which shew this very clearly. They were taken by the Government officials on the trial trip of H.M.S. "Amphion," 5500 indicated horse-power, and so were not a small experiment, and they shew that while the cut-off was reduced from ·44 to ·13, the compression has, instead of spreading out and shewing a considerable area of retarding force towards the end of the stroke, shewn these lines crowded together so as to be difficult to separate, so shewing a very slight increase in back pressure.

CHAIRMAN—I admit that Morton's is an improvement upon Joy's.

Mr JOY—With this reservation, that the improvement is only theoretical, and that only on the back-going, the practical and commercial value of which is not of much account.

Mr THOMSON—I think there is one thing we have lost sight of, and that is, we have not determined whether the radial gear is a superior one to the link motion, and if it would be an advantage to introduce it into our engines.

CHAIRMAN—I think one valve motion would do as well as the other, but when you have the alteration in the engines from compound to triple-expansion, and the shortening of the engines; there seems to be a decided advantage.

Mr THOMSON—I think Mr Morton's valve-gear claims a better distribution of steam than the eccentric.

Mr ROBERTS—I did not hear anything Mr Joy had to say about his valve-gear. Perhaps you have read an extract in the *Engineer* of July 5th, in reference to Mr Joy's system of radial valve-gear fitted in two of the "Glen" Line steamers. Anything I have to say is certainly in favour of Mr Joy's gear. I have under my charge two sets of engines where Mr Joy's gear is fitted, and they have had a great deal of hard work. The steamers are 3500 ton vessels, and the gear has proved very effective. I know that this gear is giving every satisfaction, and has had nothing done to it. The engines develop 3109 indicated

Digitized by Google

horse-power. I am well satisfied with Mr Joy's gear, and Mr Bruce may say that Morton's gear has advantages over it, but as yet I have not had test of it. I think that locomotives will be the best test for any gear, far more so than marine engines.

Mr THOMSON—If we had a diagram of Mr Joy's gear before us we might understand it a little better.

CHAIRMAN—I have suggested to Mr Joy that he present to the Society a model of his gear similar to this one which has been presented by Mr Morton, not that he will benefit by getting orders from any of the young men, but that they may get a thorough knowledge of the working of it.

Mr JOY—I shall be glad indeed to present a working model to the Institute, not a wooden one, but a cardboard one, one which will, I think, be indestructible. In reference to the gear itself, I wish you to notice that every pin has a single joint, so that each pin can be properly fitted and the centres kept parallel. It is difficult, or shall I say almost impossible, to get pins and joints perfectly fitted when the double jaw joint is used. Mr Roberts said he thought that locomotives were the most trying work; now I differ and think that rolling mill work is the most trying.

CHAIRMAN—I don't think you have quite explained your gear clearly to every one here.

Mr JOY then explained his gear by diagrams and drawings on the blackboard. [The model which is to be presented to the Institute will serve to illustrate all this to the members who were not present to see the details pointed out, and who desire to study the subject further.—J. A.]

Mr ROWE—I rise to propose a vote of thanks to Mr Joy, without whose presence, I think, the gear would have been only partially explained. We are indebted to Mr Joy for coming to-night.

---

## Mr BRUCE'S CLOSING REMARKS.

I am pleased to have the opportunity of meeting Mr Joy to-night, and to hear what he has to say concerning the system of valve-gear he has introduced.

Digitized by Google

That he knew nothing of Brown's invention until after the publication of his (Joy's) own arrangement, does not, however, deprive Mr Brown of the fair share of credit that the chairman has given him.

Mr Joy's remarks, as to saving in first cost, space, and deadweight, by the adoption of radial valve-gear, are fully confirmed by the experience of those engineers in the Clyde district who have adopted Morton's system.

Regarding the actual merits of the systems of radial valve-gear you have had laid before you to-night, I would just remark that what Mr Joy has said with a view on the one hand to minimise the practical importance of the admitted geometrical imperfections of his own system, and on the other hand to depreciate the undisputed geometrical superiority of Morton's system (testified to both by Mr Joy himself and by the Chairman), deals not so much with matters of fact as of opinion, and may safely be left to the judgment of the members present.

I do not doubt that when you have had time to read the paper and to examine and compare the indicator diagrams, valve diagrams, tables of valve settings, and the models, relating thereto, you will readily appreciate my contention that, although Morton's system belongs to a class with other members of which it necessarily has certain mechanical elements in common, it possesses distinctly novel features as a *reversing* valve-gear, and as an economical system of steam distribution.

To sum up—the novelties and resultant advantages of Morton's system of valve-gear are primarily based upon the fact that, whilst all preceding systems of non-eccentric radial valve-gears (as for instance Englemann's and Brown's, referred to in passing), take their motion from a *fixed* point on the connecting rod, and therefore retain in the movement of the valve, the error (relative to the piston's movement) due to the angular motion of the connecting rod and to the consequently unequal lateral vibrations of the point fixed thereon. Morton's system on the contrary, starts by taking the motion from a *movable* point so controlled as to constitute a source of motion *truly in time with the piston*, and thus imparts to the valve a movement from which the error referred to is entirely eliminated.

This substantial and practical advantage is secured without complication of parts, and not only establishes the non identity of Morton's

Digitized by Google

system of valve-gear with any other system of its class, but results in an increased economy of steam distribution which amounts to a direct pecuniary gain in every revolution of the engine.

I may mention that this system of reversing valve-gear is being freely taken up by engineers and shipowners in the Clyde district and elsewhere, and I have to-day received from the superintendent engineer of an important steam navigation company in London intimation of his intention to adopt this gear in two of the steamers under his charge.

Digitized by Google

Digitized by Google

SHEET 1.—FIG. 1.

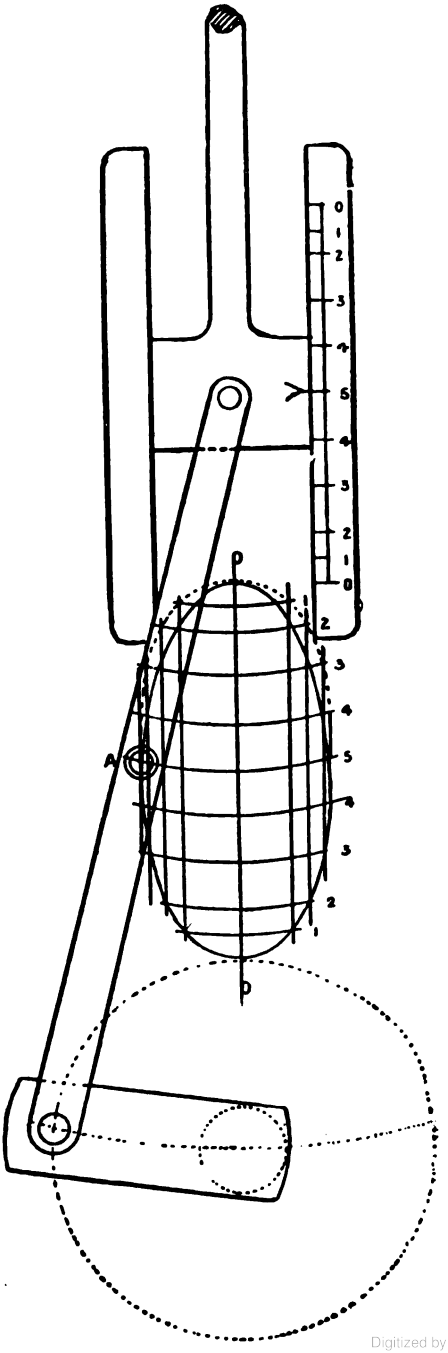


Digitized by Google

Digitized by Google

SHEET I.—FIG. 2.

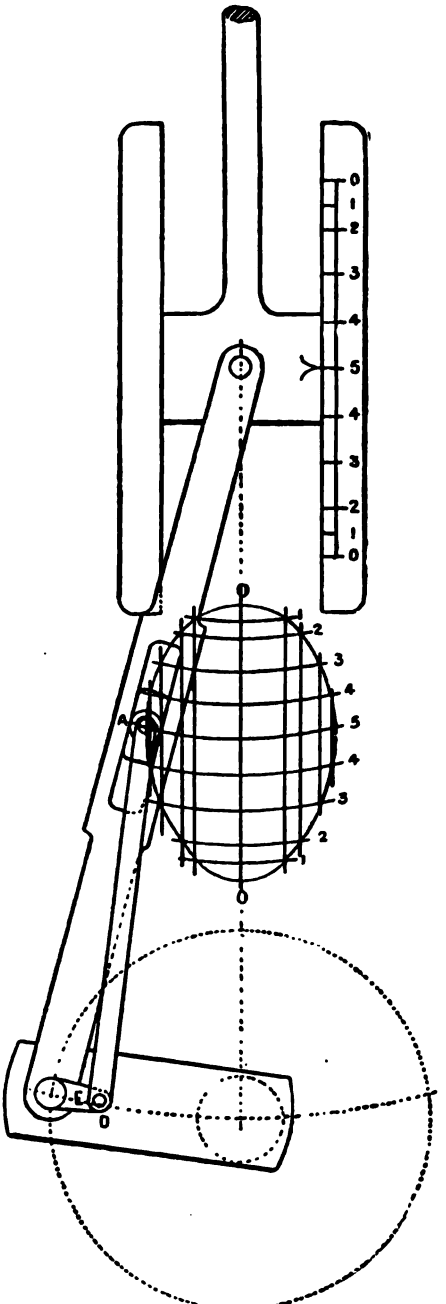


Digitized by Google

Digitized by Google

SHEET 2.—FIG. 3.

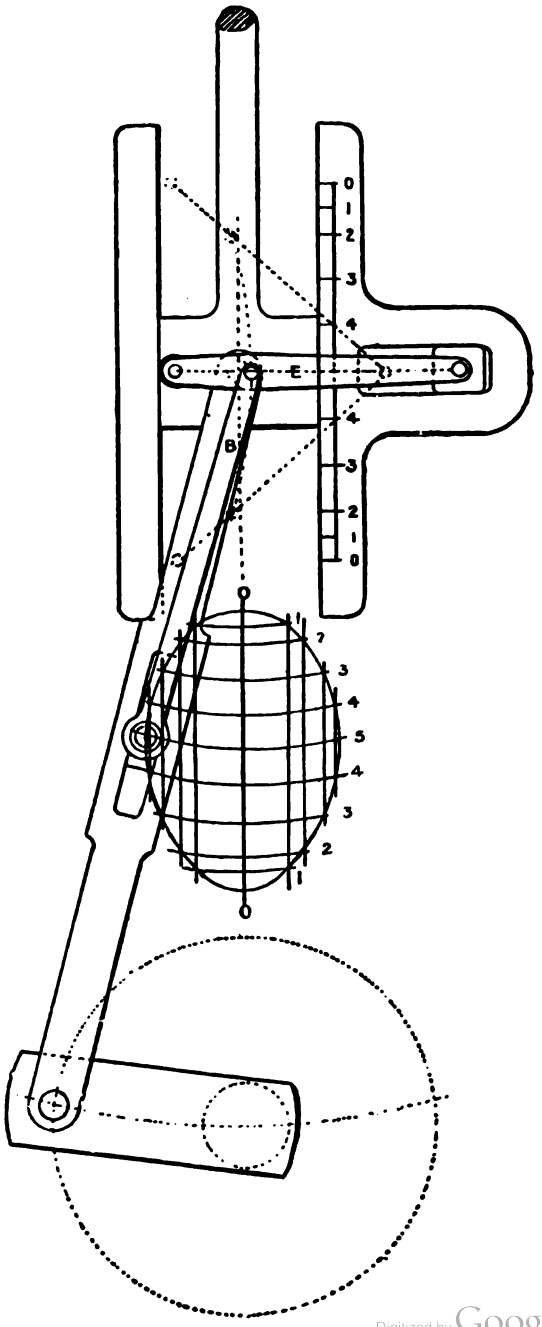


Digitized by Google

Digitized by Google

Digitized by Google

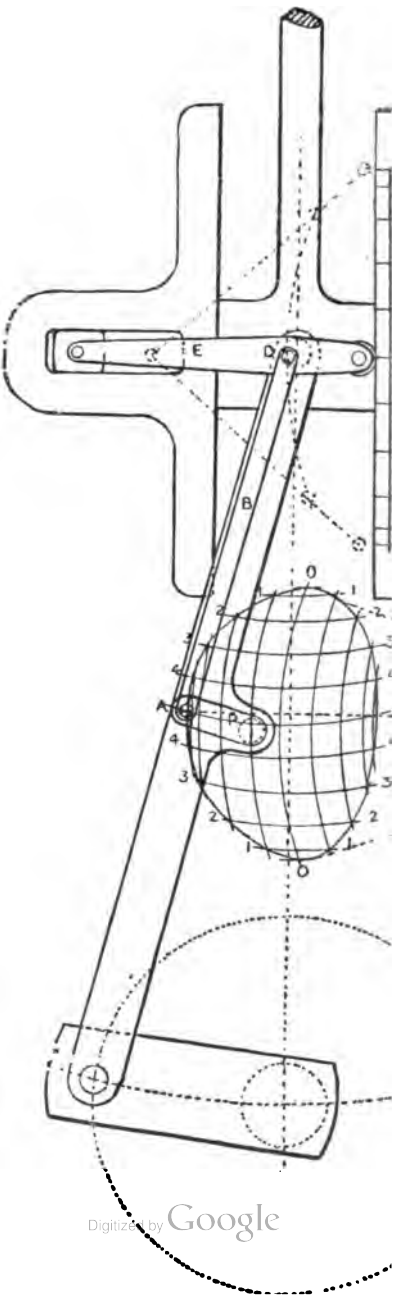


Digitized by Google

-FIG. 4.

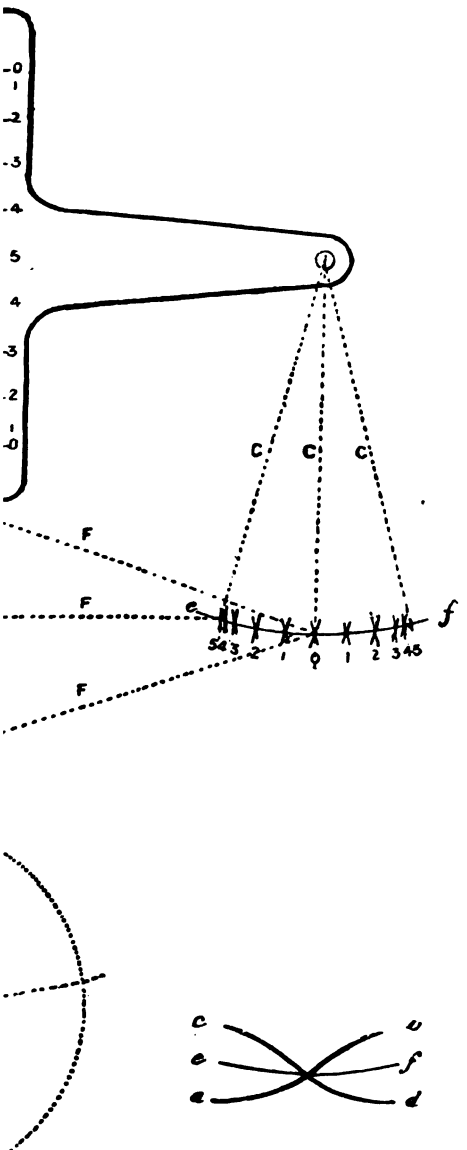


FIG. 4[1].

Digitized by Google

UNIV. OF MICH.

Digitized by Google

Digitized by Google

SHEET 4.—

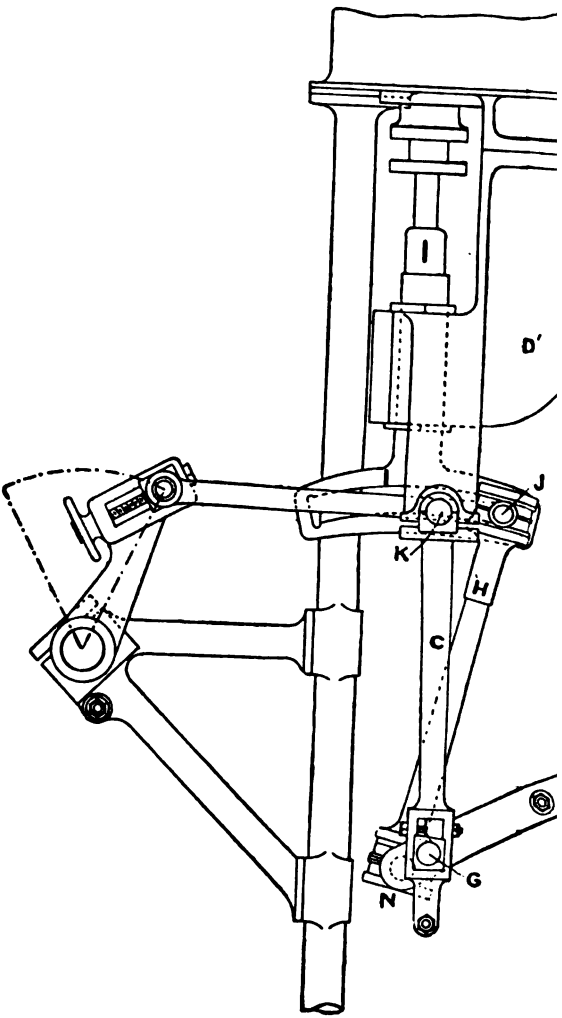


Digitized by Google

.—Fig. 5.

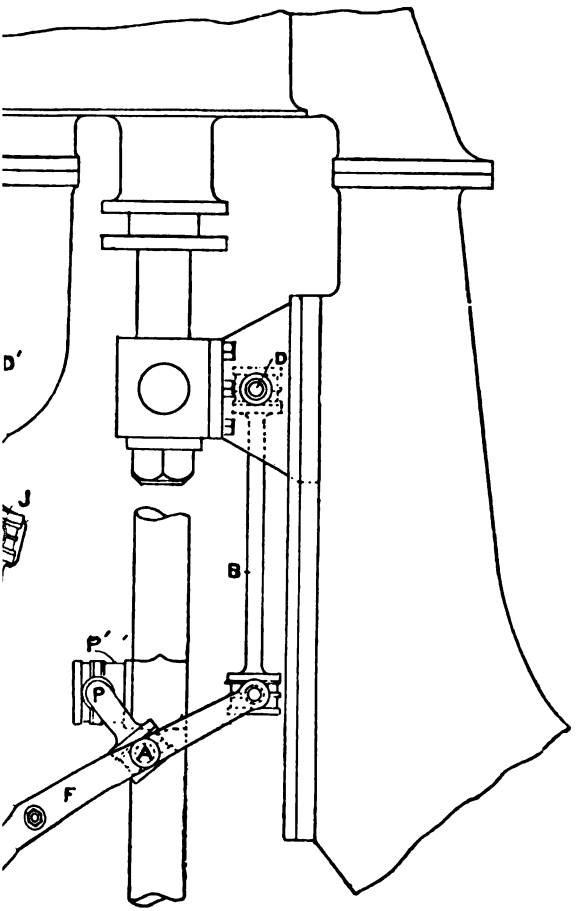


Digitized by Google

Digitized by Google

Digitized by Google

SHEET 5.—FIG. 6.

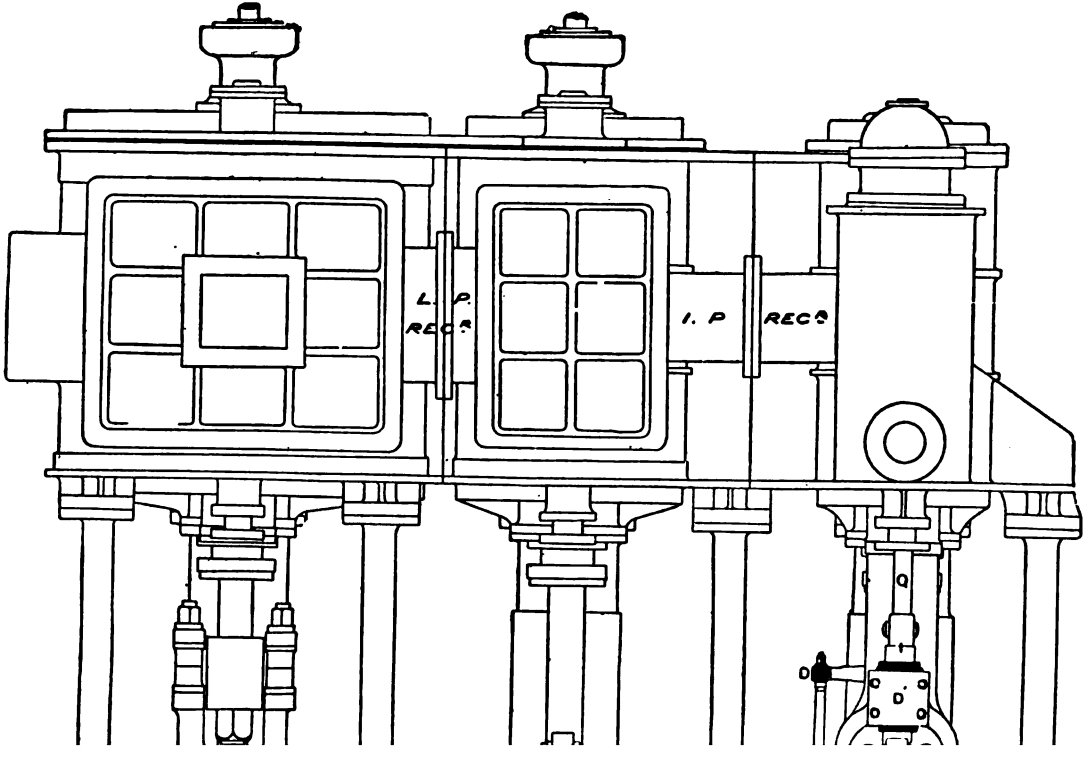


Digitized by Google

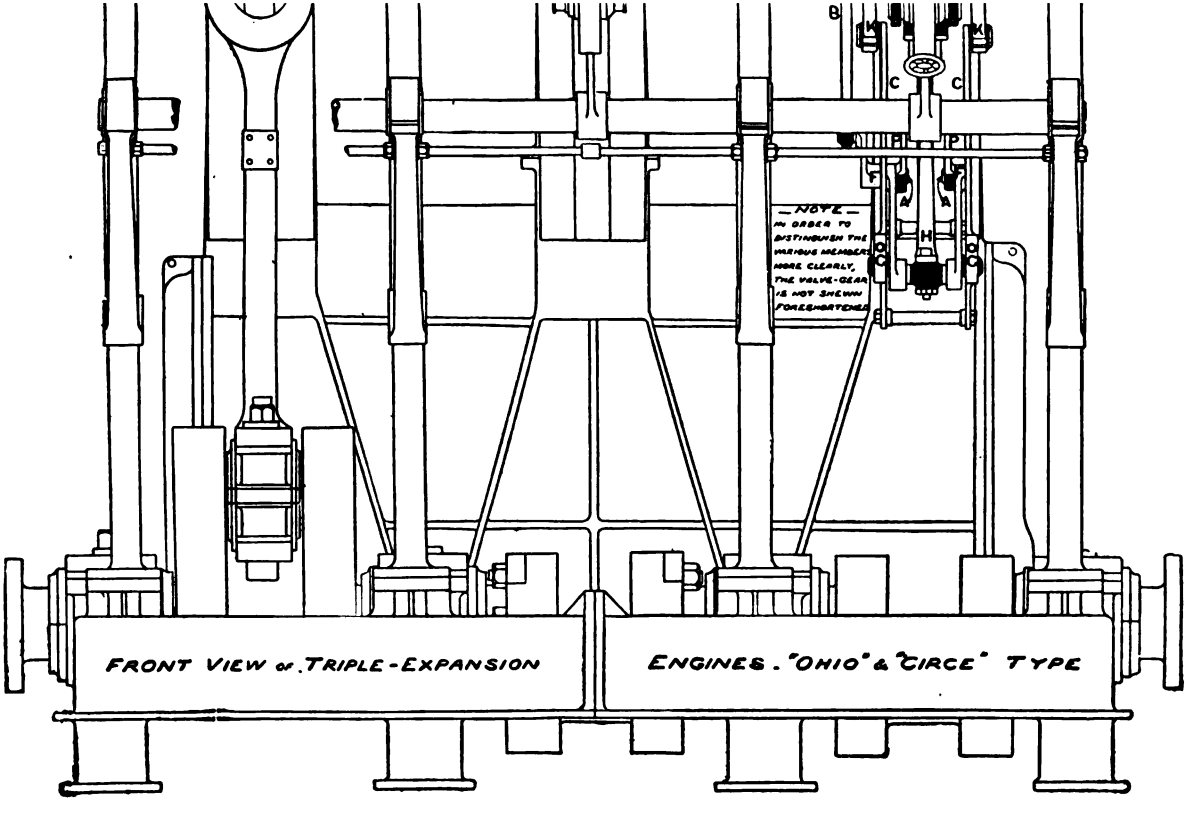


FRONT VIEW OF TRIPLE-EXPANSION ENGINES. "OHIO" & "CIRCE" TYPE

Digitized by Google

Digitized by Google

Digitized by Google

SHEET 6.—FIG. 7.

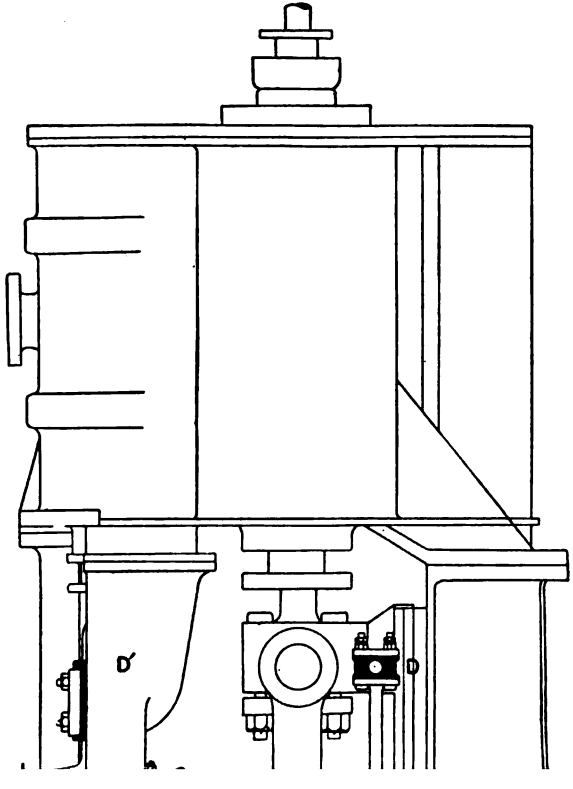


Digitized by Google

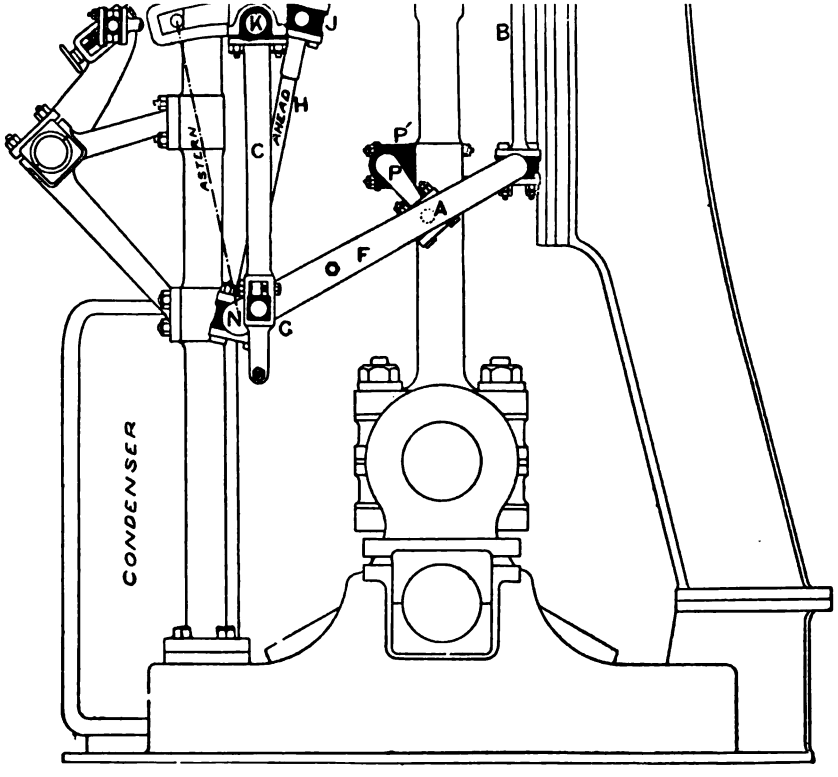


End Elevation of Compound Engine converted to Triple-Expansion, "Clan" Line Type.

Digitized by Google

Digitized by Google

Digitized by Google

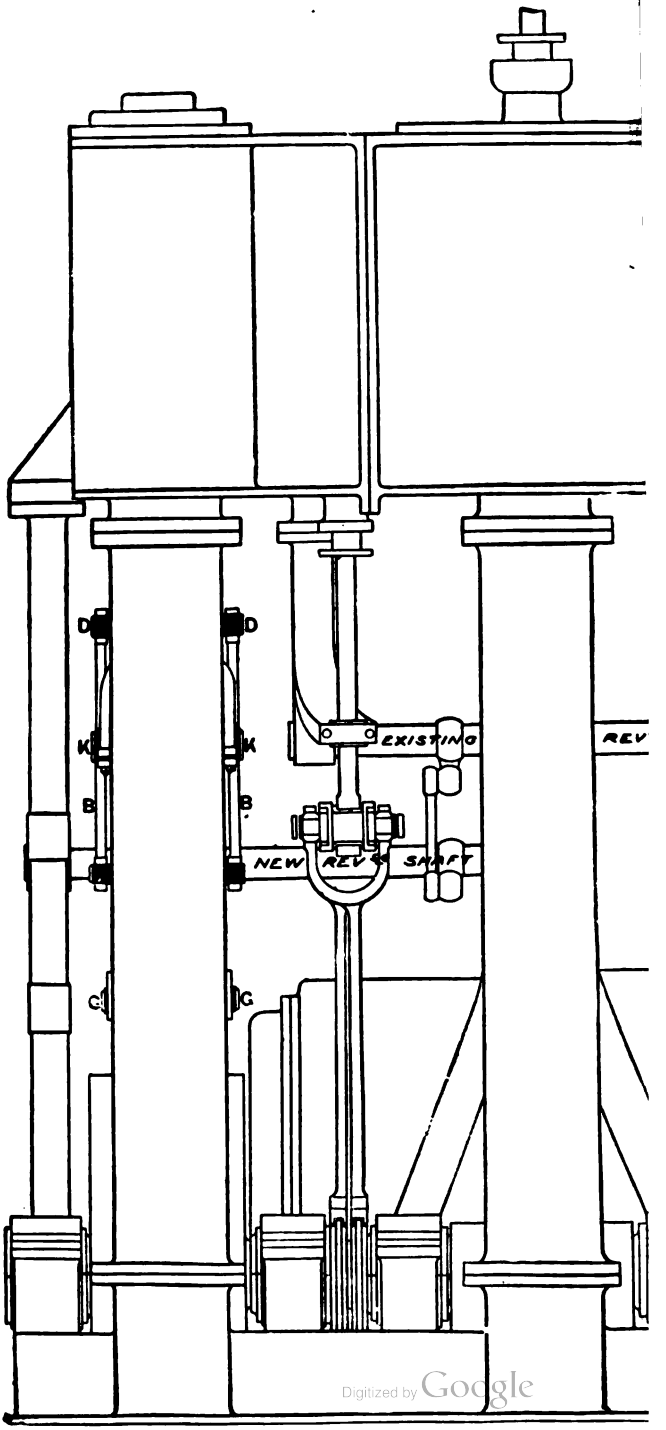


Digitized by Google

Front Elevation of Compound Engine conv

—FIG. 7[1].

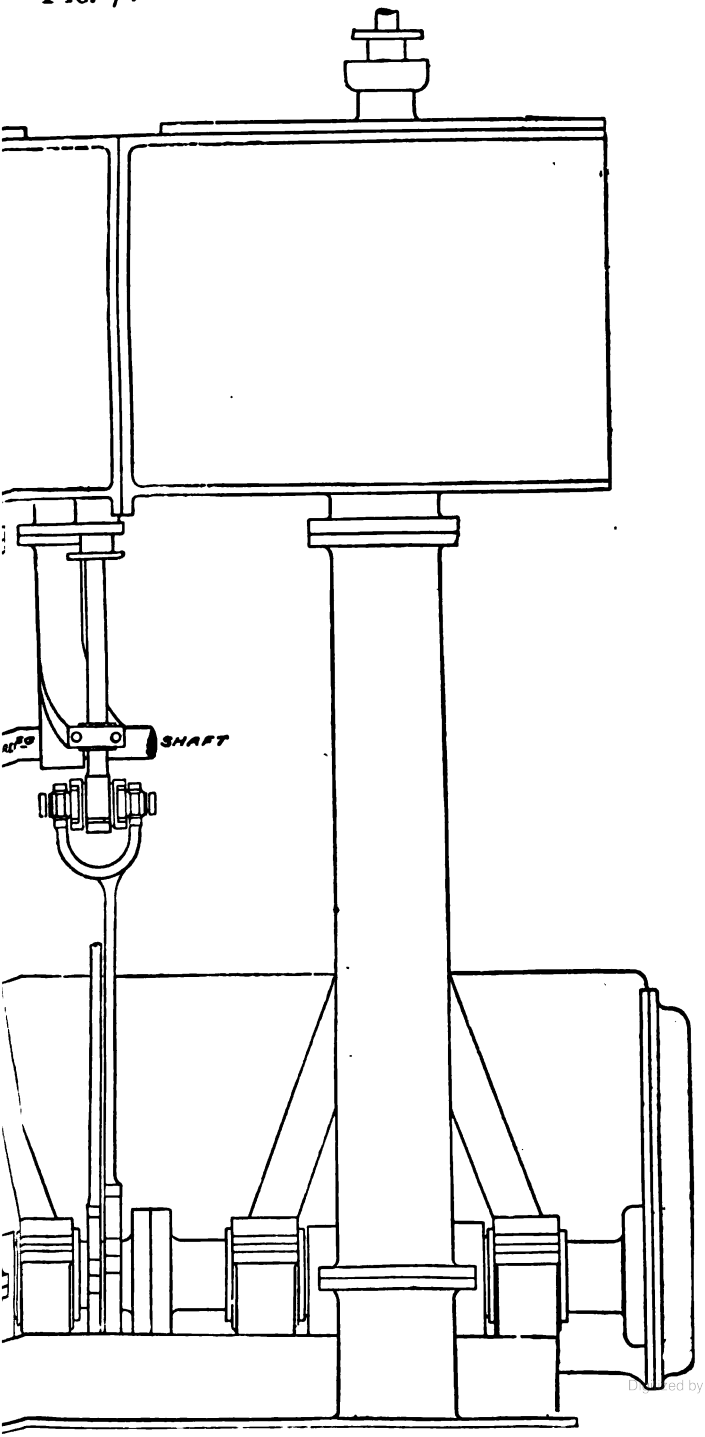


Digitized by Google

rted to Triple Expansion "Clan" Line Type

Digitized by Google

Digitized by Google

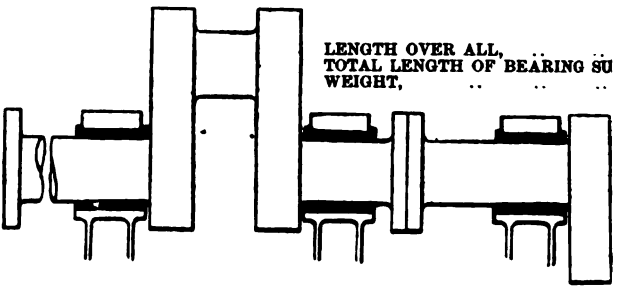


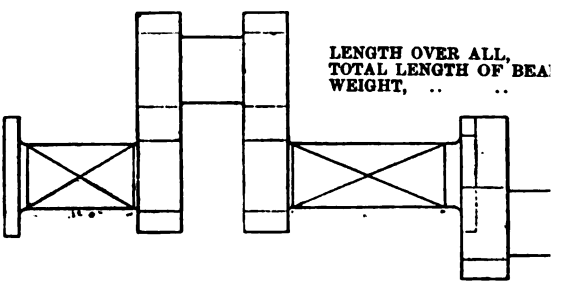


Digitized by Google

SHEET 7.—FIG. 8.

.. .. 26 ft. 9 in.
RFACE, .. 108 in. } This Shaft for Common Eccentric Gear.
.. 19 tons 13 cwt.

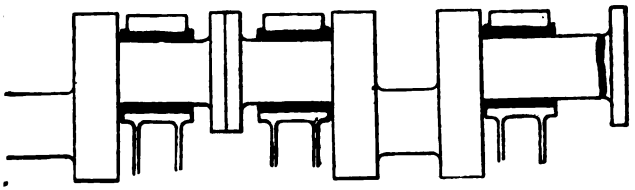

FIG. 10.

.. .. .. 22 ft. 6 in.
RING SURFACE, 120 in. } This Shaft (generally coupled as shown) used with MORTON'S VALVE-GEAR.
.. .. .. 17 tons 8 cwt.

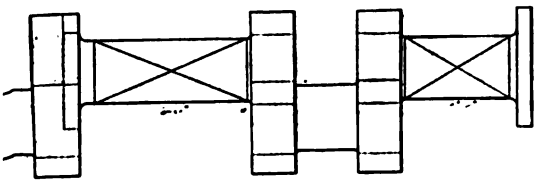

Digitized by Google

Digitized by Google

Digitized by Google

Digitized by Google

Digitized by Google

SHE

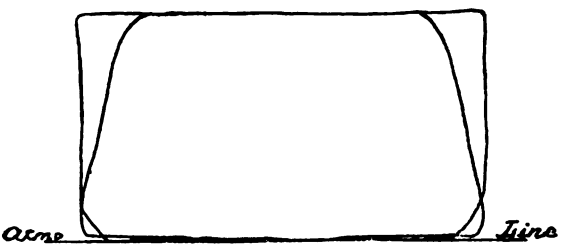


Full Gear—12 Revs. per min.

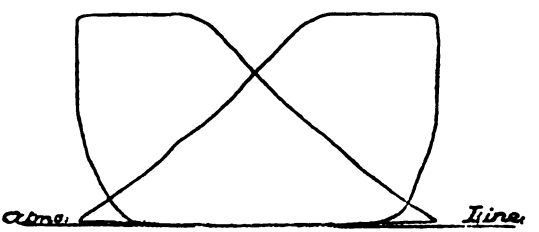


Cut off at ¼ Stroke. Double-ported Valv

Taken from PAIR OF COUPLED WINDING ENGINES (Cylinders, 24 in. diam.

Digitized by Google

r 8.

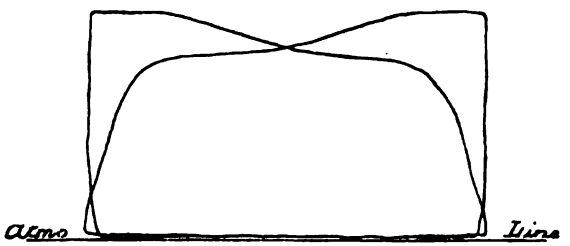


Full Gear—20 Revs. per min.

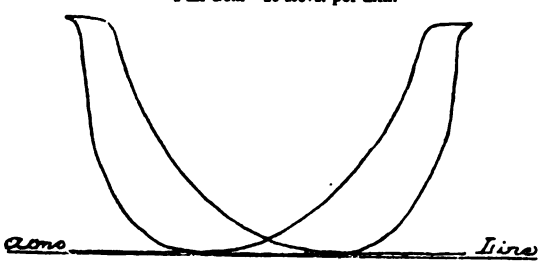


ı. Travel 2⅝ in. Cut off at 1-12th Stroke.

y 60 in. stroke) at Young's Paraffin Light Company's Newliston Mines.

Digitized by Google

UNIV. OF MICH.

Digitized by Google

## SHEET 9.

**Indicator Diagrams from Triple-Expansion Engines of s.s. "Ohio," Philadelphia to New York, 25th July 1887.**

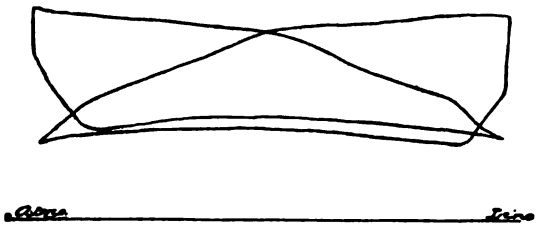

High Pressure Cylinder
Piston Valve.

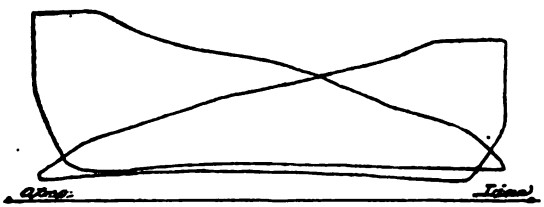

Intermediate Pressure Cylinder.
Double Ports. Pressure Balanced.

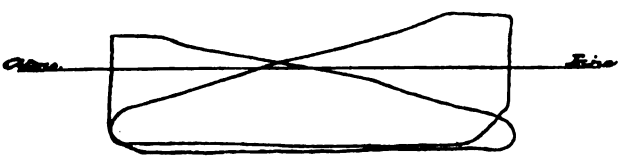

Low Pressure Cylinder.
Double Ports. Common Valve.

**Cylinders, 31, 46, and 72 in. by 51 in. stroke. Travel of each Valve, 5¼ in.**

**Mean of 4 hours—**

| | | |
|---|---|---|
| Steam on Guages, | H.P. | 140 lbs. |
| | I.P. | 56 ,, |
| | L.P. | 11 ,, |
| Vacuum, | | 26 in. |
| Revs., | | 67·7 per min. |

| Indicated Horse-power. | |
|---|---|
| High-Pressure, | 600·5260 |
| Inter. ,, | 767·9226 |
| Low ,, | 773·9464 |
| Total, | 2142·3950 |

Digitized by Google

Digitized by Google

## SHEET 10.

Indicator Diagrams from Triple-Expansion Engines of s.s. "Circe," 13th April 1888.

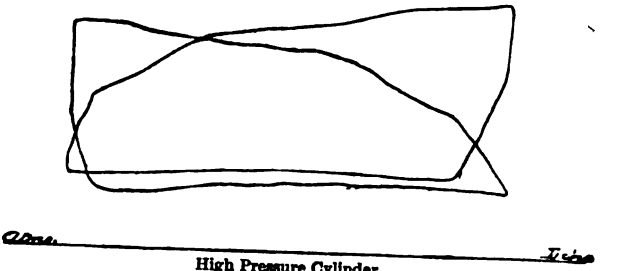


High Pressure Cylinder.
Piston Valve.

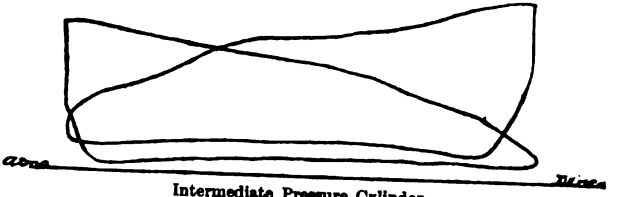


Intermediate Pressure Cylinder.
Common Valve. Double Ports.

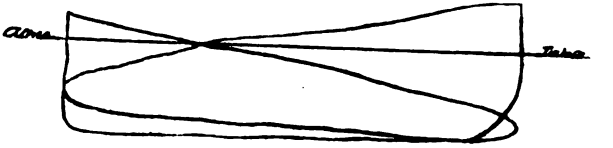


Low Pressure Cylinder.
Common Valve. Double Ports.

Cylinders, 25, 41, and 68 in. by 48 in. stroke. Rev., 79 per min.
Travel of each Valve, 5¼ in.

| | Mean Press. | Ind. Horse-power. |
|---|---|---|
| High Pressure Cylinder, - - | 78·1 lbs. | 734·15 |
| Intermediate Pressure Cylinder, | 27·74 ,, | 701·4 |
| Low ,, ,, | 9·6 ,, | 667·6 |
| Total, - - - - - - | | 2103·15 |

Digitized by Google

Digitized by Google

## SHEET 11.

**Indicator Diagram from High Pressure Cylinder of Triple-Expansion Engines (converted from Compound) of s.s. "Clan Gordon," 22nd December 1888.**

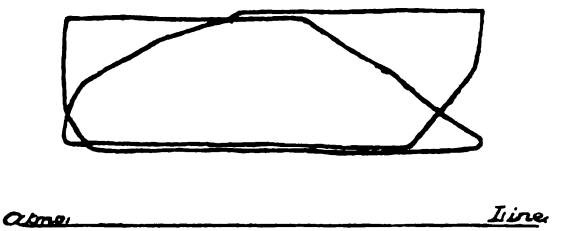


**Mean Pressure, 66·4. Indicated Horse power, 369.**
**Piston Valve, 5¼-in. travel.**
**Cylinders, 22, 34½, and 59 in. by 42 in. stroke. Revs., 69 per min. Steam Pressure, 150 lbs.**
**The Valves of Intermediate and Low Pressure Cylinders are driven by ordinary Eccentric Gear.**

Digitized by Google

Digitized by Google

Digitized by Google

SHEE

VALVE DIAGRAMS from High-Pressure Cylinder o

Polar Diagram, showing relativ

FIG. 11.—AHEAD.

Radial Lines repre

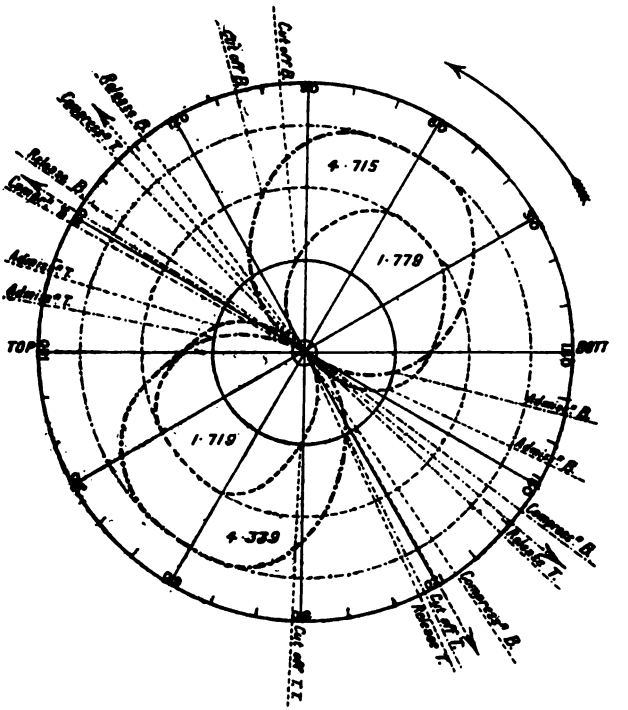


FIG. 13.—Elliptical Diagram, showing

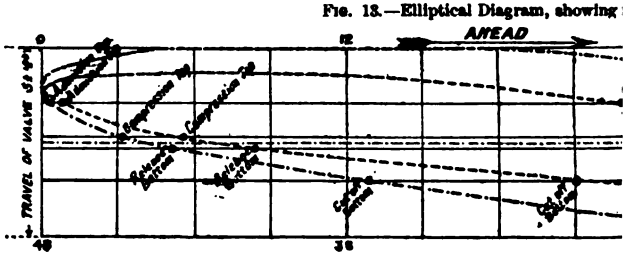


Vertical Lines represent position o

Digitized by Google

Triple-Expansion Engines of s.s. "Circe," 2100 I.H.P.

movements of Valve and Crank.

FIG. 12.—ASTERN.

ent Crank Angles.

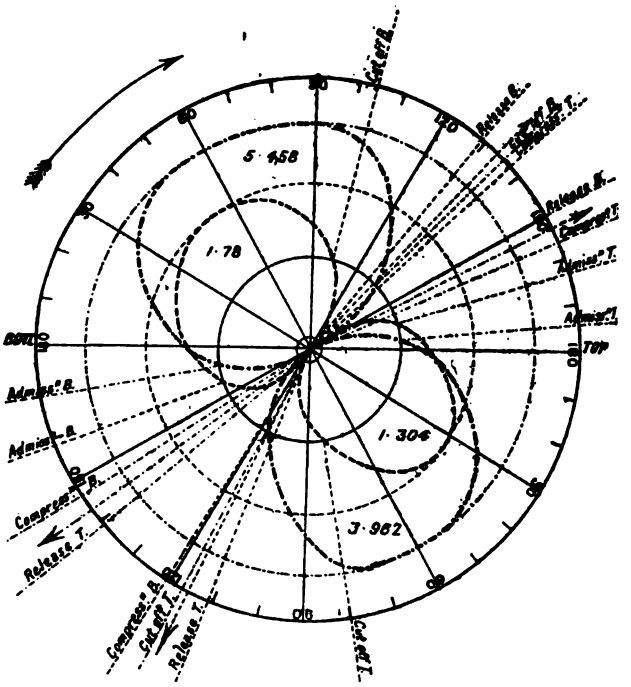


elative movements of Valve and Piston.

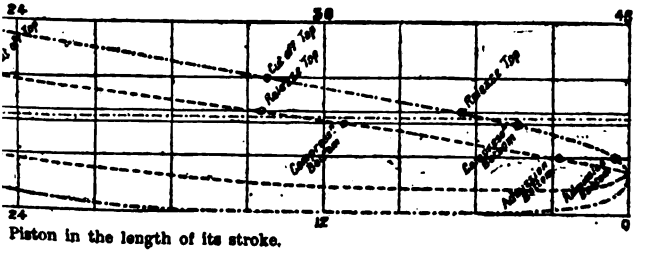


Piston in the length of its stroke.

Digitized by Google

Digitized by Google

Digitized by Google

MORTON'S PATENT "VALVE-GEA

| | PORT OPENING | | | | CUT-OFF PERCENTAGE | | | | |
|---|---|---|---|---|---|---|---|---|---|
| | FORWD. | | BACKWD. | | FORWARD | | BACKWARD | | F |
| Nº | LEAD | FRONT & BACK EQUAL | LEAD | FRONT & BACK EQUAL | FRONT | BACK | FRONT | BACK | FR |
| 1 | | | | | 10 | 10 | 10 | 10 | 4 |
| 2 | | | | | 20 | 22½ | 20 | 22½ | 6 |
| 3 | | | | | 30 | 33 | 30 | 34 | 7 |
| 4 | | | | | 40 | 41 | 40 | 44 | 7 |
| 5 | | | | | 50 | 50½ | 50 | 54½ | 8 |
| 6 | | | | | 60 | 59 | 60 | 63½ | 8 |
| 7 | | | | | 70 | 67½ | 70 | 72½ | 8 |
| 8 | | | | | 75 | 72 | 75 | 77 | 9 |

Taken from M

NOTE.—The SECTIONED AREA repre

Digitized by Google

TABLE A

R."—TABLE OF VALVE SETTINGS.

| COMPRESSION PERCENTAGE | | | | TRAVEL EQUAL IN FORWARD & BACKWARD GEAR |
|---|---|---|---|---|
| ORWARD | | BACKWARD | | |
| ONT | BACK | FRONT | BACK | |
| 16 | 47 | 44½ | 45 | |
| 2½ | 62½ | 60 | 60 | |
| 0 | 71 | 70½ | 70½ | |
| 5 | 76½ | 76½ | 76½ | |
| 30 | 81 | 81½ | 81½ | |
| 14 | 85½ | 86 | 86 | |
| 18 | 88 | 89½ | 89½ | |
| 0 | 90 | 91½ | 91½ | |

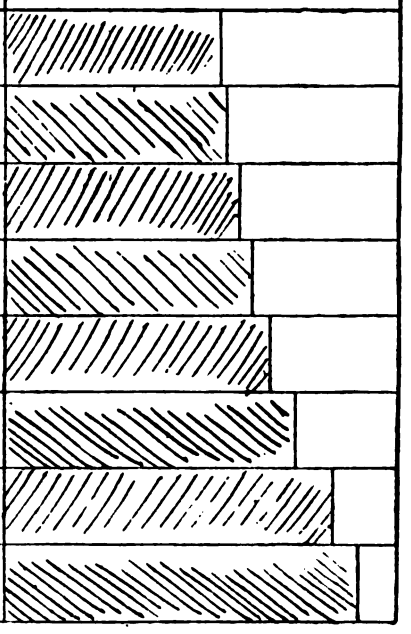

del exhibited.
ents PORT OPENINGS and TRAVELS.

Digitized by Google

Digitized by Google

UNIV. OF MICH.

Digitized by Google

JOY'S PATENT "VALVE-GEAR

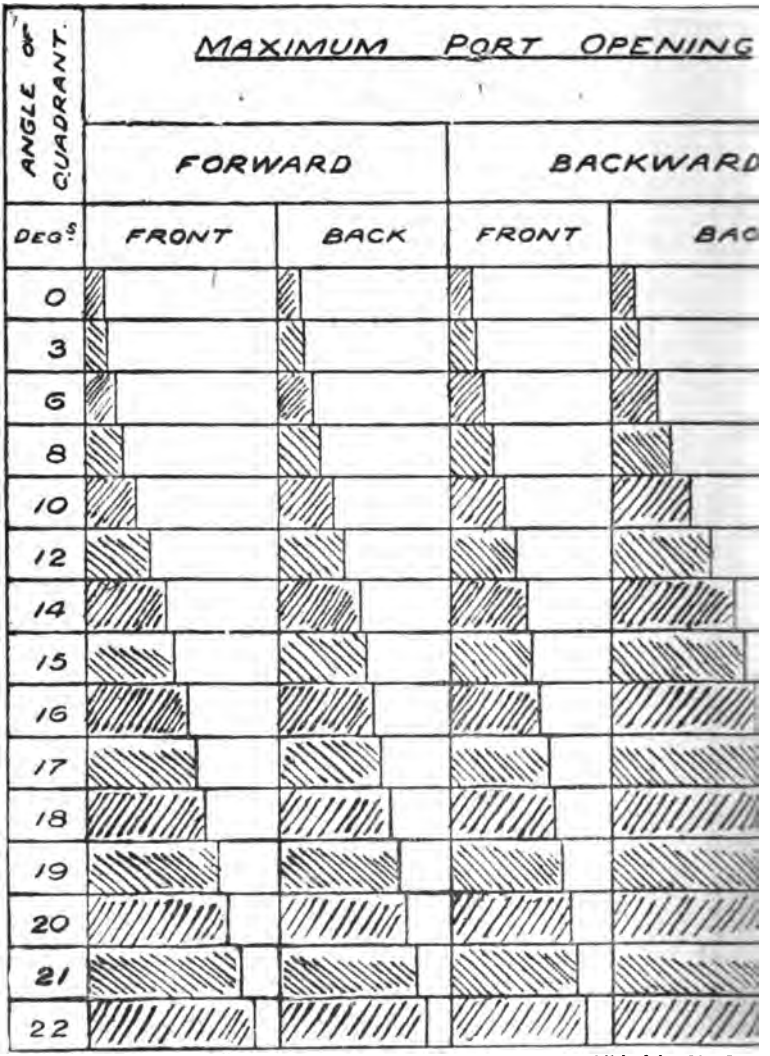


As published by M Joy

NOTE.—The SECTIONED AREA represents PORT OPENIN

This Table produced at the Discussion on 27th of September for comparis

Digitized by Google

'—TABLE OF VALVE SETTINGS.

| | CUT-OFF PERCENTAGE | | | | TRAVEL |
|---|---|---|---|---|---|
| | FORWARD | | BACKWARD | | BLACK SHEWS EXCESS OF TRAVEL IN BACKWARD GEAR |
| | FRONT | BACK | FRONT | BACK | |
| | 6½ | 7 | 6½ | 7 | |
| | 12½ | 14 | 16 | 19 | |
| | 24 | 24 | 27½ | 31½ | |
| | 33 | 33 | 36 | 40 | |
| | 42 | 41 | 44½ | 48 | |
| | 50 | 50 | 52½ | 55 | |
| | 57½ | 57½ | 60 | 60 | |
| | 60½ | 60½ | 63 | 63 | |
| | 63½ | 63½ | 66 | 65½ | |
| | 66½ | 66½ | 69 | 67½ | |
| | 68½ | 69 | 72 | 69½ | |
| | 71 | 72½ | 79½ | 71½ | |
| | 73 | 75 | 77 | 73 | |
| | 75 | 77 | 79 | 75 | |
| | 77 | 79 | 81 | 77 | |

"Industries" 10th May 1889
and TRAVELS, neither "Leads" nor "Compressions" are given.
(in regard to uniformity of steam distribution) with Table A (Morton's Gear).

Digitized by Google

Digitized by Google

# INSTITUTE OF MARINE ENGINEERS,

SESSION, 1889-90.

# SIXTH PAPER

(OF TRANSACTIONS)

ON

# BILGE PUMPS & STRUMS.

BY

MR. F. W. WYMER,

(VICE-PRESIDENT).

*READ OCTOBER 11th.*

PRICE SIXPENCE.

LONDON:

PRINTED AT "THE MARINE ENGINEER" OFFICE, PATERNOSTER ROW.

PUBLISHED AT THE LANGTHORNE ROOMS, 15 & 17, BROADWAY STRATFORD, ESSEX.

Digitized by Google

Digitized by Google

THE LANGTHORNE ROOMS,
15 AND 17, BROADWAY,
STRATFORD,
*Oct.* 11*th*, 1889.

## PREFACE.

A meeting of the INSTITUTE OF MARINE ENGINEERS was held this evening, presided over by Mr. W. J. CRAIG, when Mr. F. W. WYMER read a Paper on "Bilge Pumps and their Connections."

There was a good attendance of Members and friends, and the discussion was productive of much good. A full minute of the proceedings is given in the following pages. Illustrations are also given, showing what Mr. Wymer advocated, and what Mr. Sommerville referred to in the remarks he made.

The importance of the subject brought before us by Mr. Wymer is more than sufficient to justify another Paper, and probably someone may be inclined to write one.

In order that the social element may have some play in the affairs of the Institute, a committee has been appointed (Mr. Leslie, convener), so that social meetings may be arranged for occasionally. Members who can assist in the way of providing vocal and instrumental music or other class of entertainment should communicate with Mr. Leslie.

JAS. ADAMSON,
*Hon. Secretary.*

Digitized by Google

Digitized by Google

# BILGE PUMPS & THEIR STRUMS.

The importance of the subject must be my excuse for asking you to give me your attention for a little time this evening. In looking back over many years of steamship practice, the most important thing in a gale of wind on board a steamship (next to the working of the main engines in maintaining the position of the vessel) is, in my opinion, the working of the bilge pumps, which, although they may be said to form part of the main engines, are yet quite separate from them in the duty they have to perform, viz., clearing the vessel from the water which by any circumstances has got into the ship, endangering her buoyancy and efficiency.

I need hardly remind you of the perilous position of a steamship to whose engine-room the sea has got access, beaten the pumps by choking the strums, washed up the stokehold plates, and is fast putting out the fires; the engines meanwhile, for want of steam, only just turning over the centres.

The end of such a ship is not far off if she is distant from port and the gale does not moderate.

The slow speed of the engines renders the bilge injection connected to the circulating pump of little effect, and not to be depended upon (the strums in most cases being in an inaccessible position and choked), and baling, even if resorted to, is seldom of much use in a gale of wind.

Many of you will no doubt say, "In a well regulated engine-room this should not occur," and I agree with you; but before I have concluded my remarks on the subject, I think you will acknowledge that, although an experienced and careful engineer may have charge of the engine-room, and may have in force good

Digitized by Google

regulations for the same, he may under certain circumstances be completely beaten, owing to defective connections and arrangements of the bilge pumps and strums, although on the tracing of the pump and pipe arrangements of the vessel they may appear to be nice and effective.

In looking into this subject I would like to take you back to the time when the steamships of this country were constructed of wood, and some noble specimens of naval architecture they were, but many of them had a fault which is not often found in an iron vessel, they leaked considerably through straining when in a sea way, and this water had to be kept under by the bilge pumps and bilge injection, led into the condenser. The bilge pump in these vessels was a pump therefore of much importance, and required to do its work with as little trouble to those in charge as possible. The engines most in use at that time were of the side lever pattern, and the bilge pumps were bolted on the wooden floors of the vessel, and worked from a stud in the side lever a little out from the main centre. It was an open-mouthed pump with a solid packed piston, having an eye on the top of the piston, to which was attached the rod, coupled at the upper end to the stud in the side lever of the main engines. The valve chests were cast on the pump seat, and hinged valves were fitted to the chests. A pipe on the suction side led into the bilges, on which was fixed a strum, and the discharge was carried up the side of the vessel (generally above the load water line) and discharged overboard.

The solid piston, which worked generally low down in the pump, forced out what air got access to the pump through the discharge valve, and left very little windage in the pump, and the pumps being placed so low down, they were from this cause pretty effective, and did not give much trouble.

Should the strums choke, they were easily got at by lifting a plate of the starting platform which was placed low down between the engines.

New ideas came in with iron steamers, and new designs of engines, and it became the practice to attach the feed and bilge-pump of the plunger-pole pattern to the air-pump cross-head of the engines. This made a prettier engine, and if carried out with a view to the effective working of the pumps, nothing could have been said against the design or arrangement; but, looking back now over a long vista of years, much can be seen to militate against the good working of the pumps.

Digitized by Google

In many cases the valve chests were placed at a distance outside the side levers and connected to the bottom of the pumps by a pipe between them and the valve chests. This arrangement, although looking well on paper, and possessed of the advantage of having the valve-chest outside of the working of the side lever, had this defect, that the windage around the plunger-pole of the pump, and in the intervening length of pipe to chest, was so great that the pump would continually cease to work when most required, owing to the pump becoming charged with air; and this, to such an extent, that in bad weather, an engineer's attention was almost wholly (if not quite) taken up with the duty of clearing the vessel of the water which in so many ways, through low freeboard, coamings, &c., got into the vessel, and resource had frequently to be made to the condenser bilge injection.

With the advent of screw steamers the defects in the construction of bilge pumps have not been entirely eradicated, but have in some cases been intensified by the sole or foundation of the engines being raised to suit the centre of the shaft, thus also raising the bilge pump to a greater height from the water they have to clear out of the vessel. It may be noted here that the plunger-pole pump is the worst form of pump that can be made for the purpose of raising water from any depth below its level; and when used for this purpose, as it is, in steamships, it should be so designed and arranged in such a manner (as it has been graphically expressed by Mr. J. McFarlane Gray, one of your Vice-Presidents) that all the water in the pump should run out through the valves and barrel of pump, and the pump be left empty when turned upside down.

This can only be the case when the outlet or discharge valve is placed close to the neck of the stuffing box or upper part of the pump, thus clearing the pump chamber of all air at each down stroke of the pump plunger-pole.

You will naturally ask: "What shall we do with pumps already fitted, and which have the defects pointed out in this paper?"

A ready remedy, and one that no doubt many of you have found out, can easily be applied to a defective pump, if the valves of the pump are in order, viz., by fitting a small non-return pet valve in the position under the neck of the stuffing box, thereby allowing the air to be forced out at each down stroke of the pump plunger-pole in the same manner as would be the case if the discharge valve chest was fitted in its proper place under the neck of the stuffing box. The arrangement must be valvular, so as to pre-

Digitized by Google

vent return of air to the pump on the upstroke. Lining the pump barrel to fit plunger-pole is a useful remedy in case of bad arrangement of valve chests, as it reduces the windage of the pump around the plunger-pole, and increases the efficiency of the pump.

I now come to the second part of the paper, viz.:—Pump Strums; and will not detain you much longer. It has been the general practice to fit these on the lower end of the bilge pipes between the floors of the vessel as close to the bottom as possible. This arrangement, although it may look well on a tracing of the pipe arrangement, has very serious defects in practice. In some cases the strums so placed are most difficult of access even in harbour or in smooth water; but in a seaway, with a little accumulation of water in the bilges, it is a matter of almost impossibility for a man to remain at his post and keep the strums clear.

This, in my opinion, should not be. All strums should be reasonably accessible, even when some water may have got into the bilges. Inaccessibility of bilge pump strums has, I am much afraid, led to the loss of many a vessel and her crew. To remedy this defect, in fixing strums of bilge pumps they should, in my opinion, be fitted above the engine-room or boiler platforms, with a straight, open-mouthed pipe led into the bilges. This would avoid all necessity for men crawling below platforms to get access to strums, or getting wet by the splashing of water in the act of clearing the pump strums, a result which I am sure you will all agree with me is much to be desired. At the same time it would conduce much to the safety of the vessel, by the engineers in charge having a better command of the pumps and their strums.

A design of a mud or bilge box for a new steamer is shown, from which it will be seen that the whole of the work of cleaning the strum is performed above the engine or boiler platforms.

Enlarged views of the mud or strum box are also exhibited.

## MR. WYMER'S REMARKS IN ADDITION.

I have brought here to show you a design of the strum boxes which have been made for a new vessel. This is the strum box fitted above the engine bed plates. The object which I have in view, and which has concerned me most, is to have more easy access to, and more facility for, clearing the strums. You can all picture in your minds the bilge pumps being choked, and the engineer going down to cut the pipes; why it is a foregone conclusion that

Digitized by Google

the vessel will be lost if the strums will not work. I have in my mind's eye just now a vessel which came into Falmouth a little time ago with water over her stokehole plates and on her beam ends. The strums were fitted under the engine-room, and when I asked the engineer where his strums were, he went to the other end of the engine-room and got a man to go down and crawl about 16 feet under the floors to get at the only one in the engine-room. I think that if we could get the strum fitted above the engine-room floors it would be a great improvement. Another vessel I went on board, I found the strum under the fore eccentric; and in another vessel they were fitted under the cranks. I think that you engineers cannot be too careful on this point, as you are the men whose certificates take the ship to sea; and, if anything goes wrong afterwards, you are responsible for it.

---

## CHAIRMAN'S OPENING REMARKS.

### (Mr. W. J. CRAIG).

You have heard Mr. Wymer's able paper on bilge pumps and strums. There are a good many of you here who have had a great deal to do with them, and you are now at liberty to express your opinions and relate your experiences. I know from my own experience that there are a great many different kinds of these pumps fitted, and fitted in various parts of the ship. There are a good many steamers built under low competitive prices where this subject does not get much attention, and where, in fact, a good few seem to have no idea where the bilge pumps should be placed. I notice a good many of those who "handle the levers" present to-night, and such a subject as this is bound to be well within their experience, and it will be interesting to hear what they have to say on the same.

---

## MR. HAWTHORN'S REMARKS.

There is not the slightest doubt that the bilge pumps and strums give rise to very important questions. There is one very painful experience which I had, where we had 9 ft. 6 in. of deck-load and the ballast-tank carried away. We got about 30 tons of coal into the bilges. The strum was under the centre of the engine-room, and we could not get to it without going down the crank pits. I was on board that ship for five days without food, and had to be carried out of the engine-room at last utterly exhausted. The firemen had to carry the coal along the bilges

Digitized by Google

and throw it into the fires as best they could. I am strongly in favour of having an open-ended bilge pump-pipe, with the rose on the engine-room platform, as shown on the diagram.

---

MR. ROWE.—Would Mr. Wymer show by a rough sketch what he referred to about his method of expelling the air from the bilge pumps?

---

## MR. JAMES ADAMSON'S REMARKS.

We are indebted to Mr. Wymer for his presence here to-night and for the Paper he has read to us on a subject which though too often made light of, is of very great importance not only in the economy of the engine room, but also in regard to the lives and property hazarded on the sea.

We have all doubtless experienced some of the discomforts and dangers due to what has been referred to; it is no pleasant duty to lie in the bilges, becoming for the nonce amphibious animals, with the engine-room half full of water, in efforts to clear the rose boxes and bilge pipes. Some years ago it was my lot to be caught in a typhoon in the China seas; heavy seas were shipped, and with the pitching and rolling of the vessel all the loose coal and debris were washed into the bilges, resulting in the choking of the pump suctions, and a man being stationed at the rose boxes to try and clear them. It was a hopeless task; the pipes had to be cut; this helped the pumps for a time, but soon proved ineffectual, and in the meantime the water gained upon us; the stoke-hold plates were washed up and the firing tools joined them in the race from port to starboard and starboard to port with every roll of the ship. Hand-to-hand firing was resorted to, but with the water lashing into the centre fires, steam could hardly be kept to move the engines round. In the meantime the ash buckets were being used to assist the pumps, and by hard work and unflagging energy the sea was held at bay till the violence of the storm was past; the ship was saved, but by a narrow majority.

The scene next day in the engine-room and stoke-hold, as well as on deck, was desolate in the extreme, chaos was rampant, but soon order was restored and we proceeded on our voyage. I carry with me to this day, as a memorial of the event, an impress from a stoke-hold plate, a token which I afterwards found useful as a reminder when designing bilge pipe arrangements in the drawing

Digitized by Google

office, where I think most of the fault lies, and where also the results of discussions such as these may, with advantage to all, be considered, and the defects and disadvantages experienced at sea be rectified in following steamers.

---

## MR. GRAY'S REMARKS.

I will just point out to you one or two faults in these mud-boxes, in which I think you will agree with me. I have sometimes asked engineers to show me a sketch of the very best mud-box they could make, *regardless of expense*, but few of them seemed to awaken to the conviction of the importance of mud-boxes. Some put the rose-plate in the middle, others put it in such a position that the suction of the pump was on the reverse side to what it should be. I think, with Mr. Wymer, that this question has only just begun. The mud-box and rose-plate, you see, Mr. Wymer puts on the top of the platform. Most engineers put it at the bottom of the ship, but it ought to be above the platform; otherwise, when the rose gets blocked up there is great trouble in clearing it. These mud-boxes were introduced a long time ago. The first mud-boxes I ever saw were in the *Oneida*, sailing from Liverpool with cavalry for the Crimea about 1854. A. Logan took out the patent for it, and I think A. & R. Brown made it. His idea was to keep the mud-boxes high up; and I think it was a very good one. There is one thing in connection with pumps I would here refer to, and that is, whether the connection to the feed pump ought to be on the middle or bottom of the barrel. Most engineers say the bottom of the barrel. I should like to hear an expression of opinion on this. You all know how important these pumps are. When bilge pumps are tasked to their utmost there is generally a great demand for presence of mind and calm judgment in the engineers. Without that the best pumps will sometimes not be sufficient to save a ship. A remarkable instance of this was once brought under my notice, and as I think that the lesson it teaches is very important and obvious, I will tell you about it. There was a steamer lost some years ago through water being admitted to the engine space by the bulkhead sluices faster than the pumps could take it. The steamer was not actually leaking, but a good deal of water had come on board during a gale in the previous night, and some of it had found its way to the main hold from above, through holes in the deck. The vessel had left the docks a few days before, many feet by the stern, exceptionally so, but nothing improper in that. The engine room was in the after hold, open to the stern pipe, where the hull was fine, and, therefore, the water which had before been only a few feet on the top of the ballast tank in the main hold, when run into

Digitized by Google

the engine space, was soon over the flooring plates and the fires were put out. There was a heavy swell on after the gale, which had now subsided, and the steamer rolled very much, and the flooring plates were washed about, and by that the ashes cock pipe was cut and a real leak produced. This was not attended to by those who ought to have done so, and the water continued to rise, the stern becoming more and more immersed and the bows more elevated, until she sank stern first about five hours after the bulkhead sluices were opened.

A horizontal pump, with the suction valve and discharge valve both above the barrel, on the same level, the suction valve opening downwards, is an excellent form of bilge-pump for drawing through a great length of suction pipe, or from a considerable depth. This is the best form for a salvage pump. Such a pump can never become dry through the valves being temporarily gagged.

---

## MR. HAWTHORN'S REMARKS.

I notice that it is considered by some that the suction should be kept as high up as possible in the pump. I cannot understand why the branches should be kept high; you are bound to lose water between the suction pipe and bilges. It has suggested itself to my mind that packing rings might be fitted on the plunger, say three rings in the length, and also have the plunger bearing on the walls of the chamber the whole way in place of merely at the neck and gland bushes. As to windage, which has been referred to, are we to assume that the barrel is full of air, and you have to pump this up at each stroke? I cannot see any great benefit from having the valve-box at the top of the pump in place of at the bottom.

---

## MR. SOMMERVILLE'S REMARKS.

I find it a great advantage to have placed on the main suction pipe a vacuum gauge, because the engineer on watch can see immediately how the pumps are acting. When the pumps are working well the gauge usually stands from 12 to 15 inches, but should it remain steady at 15, and the water rise in the bilges, it shows him the pipes are choked. On the other hand, should the gauge indicate no vacuum at all, it shows him he has neglected to shut some cock leading to the various compartments of the ship, or that something is preventing the valves from working.

Digitized by Google

My engineers tell me that it saves them a great deal of trouble, and they wonder it was not thought of before. I quite agree with Mr. Wymer that all bilge pumps should be fitted with an atmospheric valve, so that the plunger on its down stroke expels the air. I have also tried this, and find it acts admirably. It surprises me that all bilge pumps are not fitted with one of these valves, through which, automatically, the air may be expelled.

Some time ago I designed a simple method of clearing the roses in the various holds when the ship is full of cargo, and there is no other means of getting at them; and I submit to you, Gentlemen, a tracing of the drawing, which requires no explanation, as it is so simple. In my opinion no ship ought to go to sea without some apparatus after this style, whereby the engineer has a safe and sure method of clearing his roses without putting him to any inconvenience under any circumstances.

Twenty years ago I encountered a cyclone in which 16 ships were lost or driven ashore between Point de Galle and Madras. The engines were of the oscillating geared type, and the cylinders were unusually low down, the bottoms merely clearing the frames of the ship. As the cyclone increased, the ship, being very light, rolled heavily; in fact so much that the little water we had in the bilges displaced the stokehole and engine-room plates. Of course, a certain amount of waste and coal-dust got in the roses and choked the pumps, and we found it impossible to keep the roses clean, owing to the curious position in which they were situated. As I had been in the engine-room 16 hours my chief ordered me to get some rest, and they would do their best till I was called. When I took my watch in the morning the water had increased in the bilges so much that the bottoms of the cylinders were oscillating in water nearly up to the fourth of the length of the stroke. As we saw that the fires would undoubtedly soon be extinguished, and the ship of course become helpless, the chief and the other engineers and myself had a consultation together, and I suggested we should disconnect the pipes, take the roses from their places, and then put the pipes in their former positions, and try that plan. And in a short time we were recompensed by seeing the pumps work admirably. By 8 a.m. the bilges were pumped dry and the ship safe. From that day till two years afterwards, when I left her, we did without the roses and strum-plates, and every ship I have been in since I have made a practice of disconnecting the roses and strum-plates, because it does away with a deal of labour, and keeps the bilges clean by pumping overboard, with the water, the sediment which usually forms in bilges. Of course, Gentlemen, you know the strum-plates act as a sieve, and the water being pumped through them, it allows the clean water to go overboard and leaves the sediment in the bilges.

Digitized by Google

## MR. GRAY'S REMARKS.

I think Mr. Sommerville has misunderstood me. When the plunger is down there should be nothing but water in the pump, and the up-stroke of the pump then forms a vacuum into which the water rushes. Imagine a pump filled with water between the suction valve and discharge valve, and imagine the pump then turned upside down. In a properly designed pump the whole of the water will then leave the pump by the discharge valve. In a badly-designed pump there will be a space still filled with water, because it is now below the discharge; and when the pump is in use that space will be above the discharge valve. The connection to the discharge valves ought therefore to be at the highest part of the pump chamber.

---

Mr. Bruce.—One remark I would make in reference to the suction-pipe rising direct from the bilge, as shown on the drawing. The area between the top of the pipe and the cover seems to me to be small as well as the area of the pipe itself. I think it is advisable to have a good large area to allow for a good clear waterway.

---

## MR. ROWE'S REMARKS.

While on the way to China, in 1862, on board a man-of-war frigate, we had occasion to use the bilge injection. Mr. Wymer remarked we could not use the bilge injection so well now as then. In the case I refer to clear water flowed readily up the bilge injection. I am of opinion there should be, in addition to the usual pump attached to main engines, a special pump fitted on board, so that it could be driven at any time and so clear the bilges. The mud-box shown to us seems to be as perfect as a mud-box could be made, the chief advantages of which have been pointed out. We ought to endeavour to try and stop all dirt getting into the bilges. I think it is a most disastrous thing when you get anything into the bilges, such as coal, for instance. I think there is one point not mentioned, and that is stability. For instance, when a ship is rolling heavily, and goes, say, over to starboard, the pump is rendered ineffectual, the water also rolls over, and prevents the ship righting herself. There should thus be a provision made for reaching the water by the bilge pump on both port and starboard sides, as well as amidships.

Digitized by Google

Mr. Thomson.—A few years ago I had a painful experience of having the roses in the bilges choked. I had frequently to stay below the platform during the greater part of the watch to keep them clear.

---

Mr. Sommerville.—I never use the strum. I always take it away. I think the plunger ought to go as near to the bottom of the chamber as possible, that is, just sufficient for clearance, and that as little as possible.

---

## MR. WYMER'S REPLY.

There are pumps aud pumps. The first and best pump I know of is the bucket-pump. That pump goes down to the suction-valve and takes air and water, lifts it up to the top, and discharges it over the top of the pump. The next is the plunger pole pump, if it is so constructed that it runs itself clear of water when it is turned upside down. Always make the discharge valve at the top, next to the stuffing-box. The next is the double-acting pump.

I listened to Mr. Hawthorn's remarks with reference to water in his engine-room, and think he had plenty of it on that occasion. I have been a week without bed, while at sea, but not five days without food. Mr. Gray has given us all a great many things to think about, and we all owe a great deal to him for them. He gave us a very graphic description of the *La Plata's* loss. I hope no engineer would allow a 1¼-inch pipe to be cut without blocking it up.

Digitized by Google

Digitized by Google

UNIV. OF CH.

Digitized by Google

END ELEVATION.

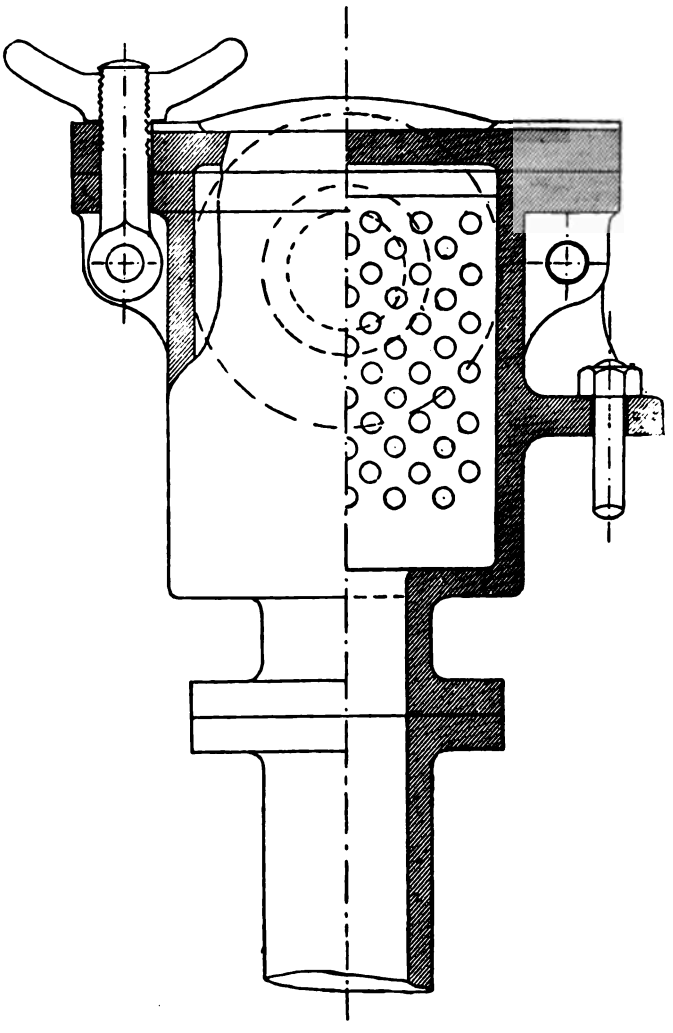

Digitized by Google

1.

PLAN.

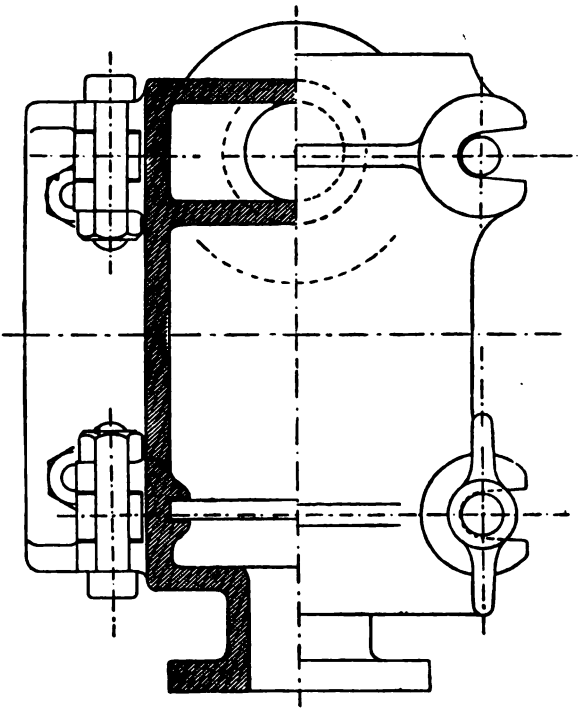

Digitized by Google

Digitized by Google

Digitized by Google

**Figure 2.**

**Elevation.**

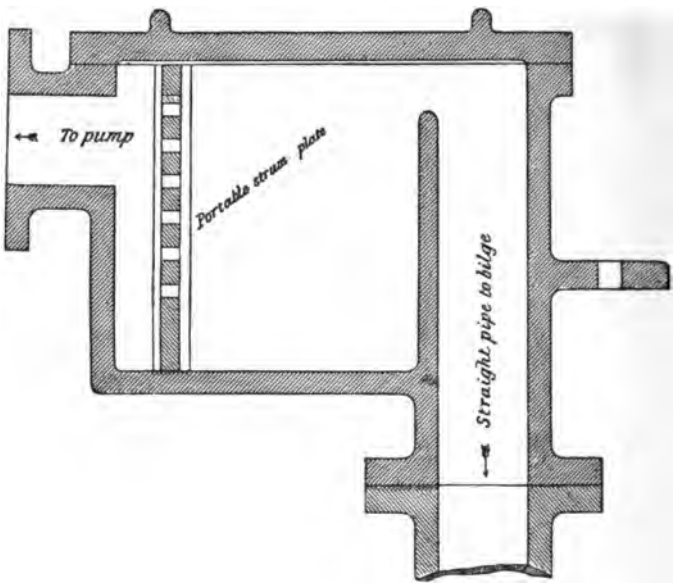


Digitized by Google

FIGURE 3.

ELEVATION.

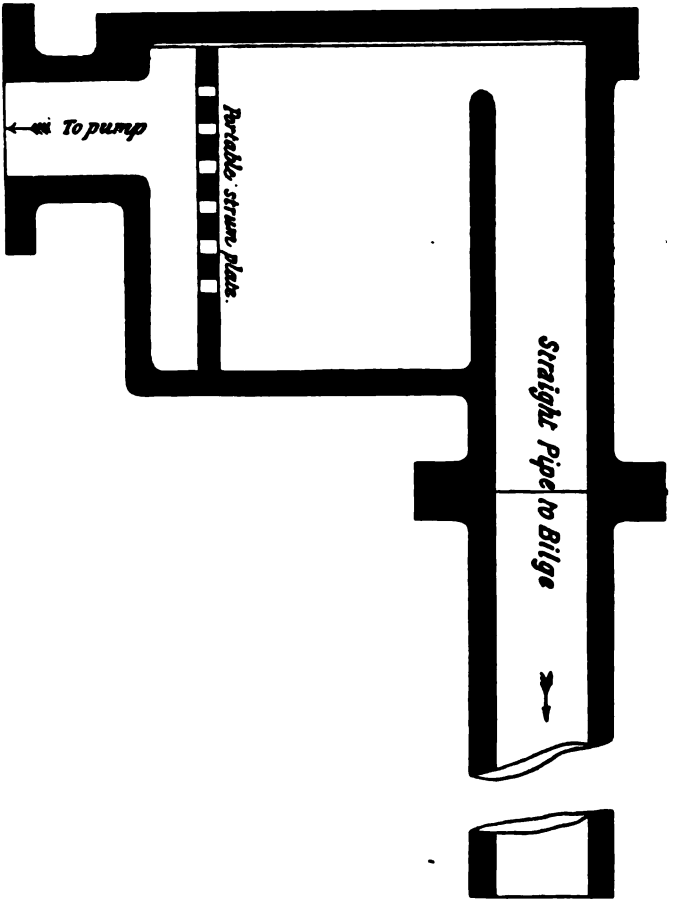


Digitized by Google

UNIV. OF CH.

Digitized by Google

Digitized by Google

PLAN FOR CLEARING BILGE

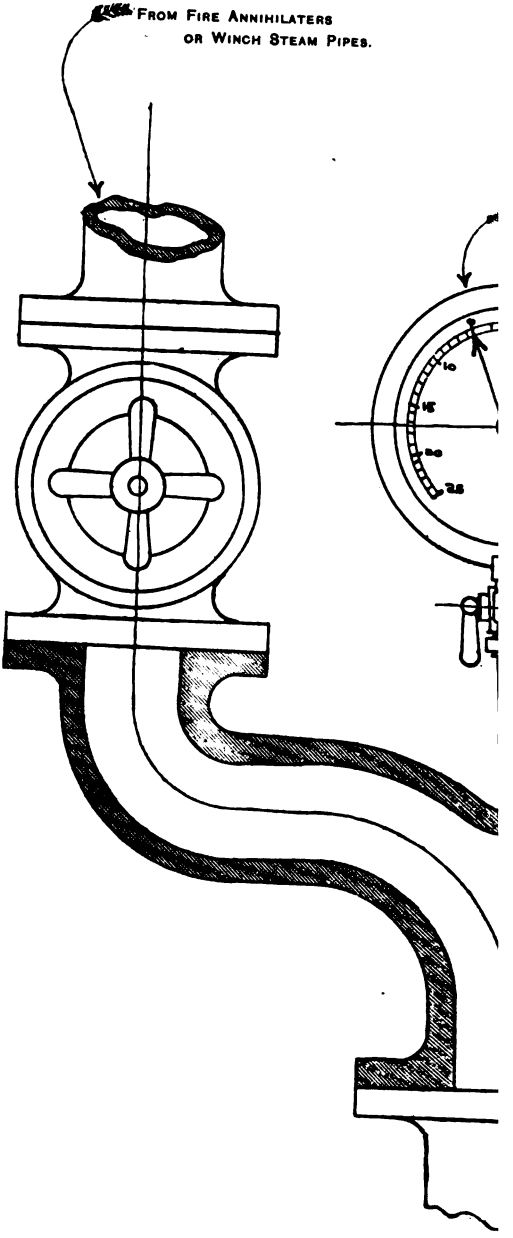


Digitized by Google

'IGURE 4.

)XES AND PIPES BY MEANS OF STEAM.

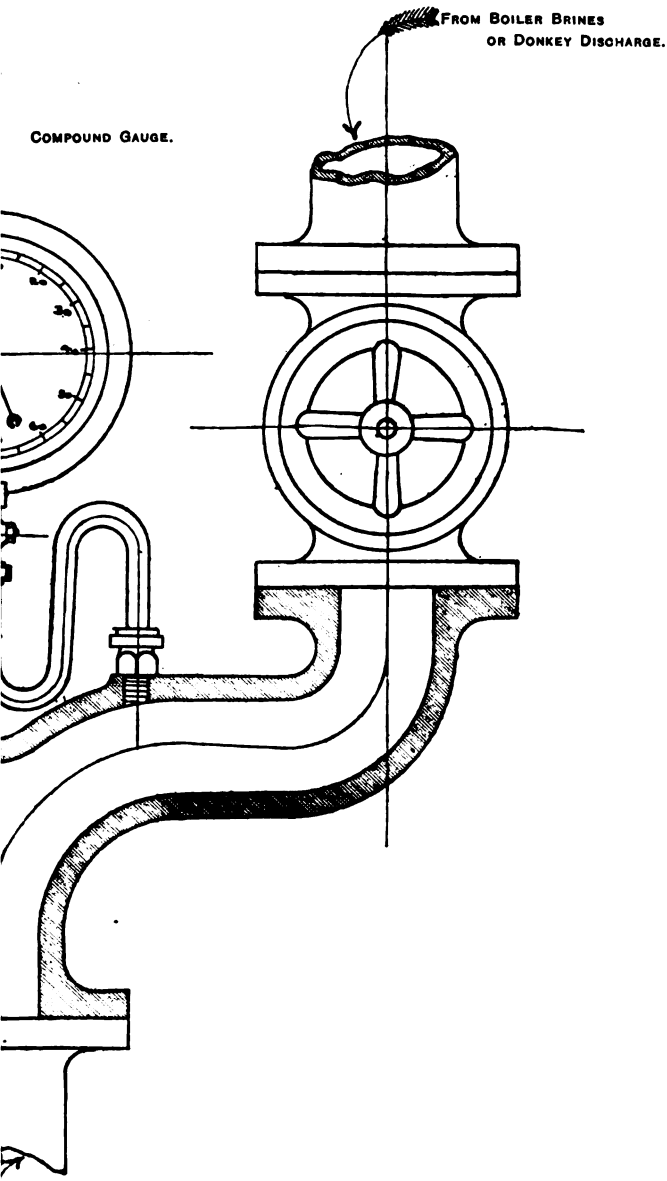


THIS FLANGE CAN BE SECURED TO EITHER THE
MAIN BILGE SUCTION OR DONKEY SUCTION VALVE CHEST.

Digitized by Google

Digitized by Google

INSTITUTE OF MARINE ENGINEERS,

SESSION 1889-90.

SEVENTH PAPER.

# FORCED DRAUGHT.

BY

MR JOS. WILLIAMS,

(MEMBER).

*Read Saturday, 19th October 1889.*

PRICE SIXPENCE.

LONDON:
PUBLISHED AT THE LANGTHORNE ROOMS,
15 AND 17 BROADWAY, STRATFORD.

LEITH:
PRINTED AT THE OFFICES OF "THE STEAMSHIP,"
2 CUSTOM-HOUSE CHAMBERS.

Digitized by Google

# Institute of Marine Engineers.

*President:*

ASPLAN BELDAM.

*Vice-Presidents:*

G. W. MANUEL.
H. M. RAIT.
J. WEIR.
A. W. ROBERTSON.
H. PRIOR.
J. TAIT.
J. MACFARLANE GRAY.
F. W. WYMER.
A. THOMSON.
W. J. CRAIG.
J. H. THOMSON.
F. W. FISH.

*Hon. Treasurer:*

J. W. DOMONEY.

*Council:*

L. P. COUBRO'.
A. GIBB.
R. LESLIE.
D. McMILLAN.
M. PRIOR.
T. W. SHOREY.
D. GREER.
J. G. HAWTHORN.
W. P. LAING.
A. J. MAGINNIS.
J. R. RUTHVEN.
J. STEWART.
W. M. TAYLOR.

*Hon. Secretary:*

JAS. ADAMSON.

Digitized by Google

# PREFACE.

THE LANGTHORNE ROOMS,
STRATFORD, *October* 19*th*, 1889.

A meeting of the Institute was held here this evening, when Mr Jos. Williams read a Paper on "Forced Draught," as given—followed by by the discussion which ensued—in the following pages.

The subject of which the Paper treats is of considerable importance, and has many sides and many side issues; it should not, therefore, be allowed to rest here, but be continued in another Paper, for which there is ample material. As a strong desire exists that "Forced Draught" should be the title of an early Paper, it is hoped that members will keep the subject before them, with a view to contribute to the literature of the Institute, and to the general good, on this subject.

The attention of members is called to the Reading Room and Library, which are open for their use every evening from 5 to 10.

The First General Meeting will be held on Friday, 1st November, at 7 o'clock, in the Langthorne Rooms.

A Conversazione for Members and their personal friends will be held in the Town Hall, Stratford, on Friday, 6th December, at 6.30 p.m. Tickets (2/6 each) may be had on application to Mr Leslie, Convener of the Recreation Committee.

The Annual Meeting and Election of Office-bearers will be held in March.

JAMES ADAMSON,
*Hon. Secy.*

Digitized by Google

Digitized by Google

## CHAIRMAN'S OPENING REMARKS
(Mr JAMES ADAMSON).

The paper for discussion to-night is a very long one, but I think we shall have fully an hour for discussion after it has been read. I will merely introduce Mr Williams, and without loss of time ask him to read the paper he has prepared, and, I may add, has come direct from Birmingham to read.

---

# FORCED DRAUGHT.

THE advantages which may be derived from the use of a fan or other mechanical means to supply the necessary amount of air requisite for the combustion of ordinary fuel in steam boilers was long ago recognised by some of the highest scientific authorities; but only within a comparatively recent period has it received much attention on the part of practical engineers.

This is perhaps owing to the fact that foreign competition has only recently made itself felt among the users of steam power at home, and economy in every department has to be studied to enable them to compete successfully with their foreign rivals; and as the successive improvements which have been introduced in connection with the steam engine continually lessen the margin of progress in that direction, there has of late been more attention given to the boiler than it has hitherto received, and it is probable that the intelligent application of forced draught to steam boilers generally, and marine boilers particularly, is likely to mark an important advance in the direction of economy.

All boilers whose furnaces are supplied with air by mechanical means, or by means additional to the "natural draught" induced by the current of hot gas in the chimney, are usually spoken of as working with forced draught, and it is in this popular sense that the term will be used in this paper; but, strictly speaking, I think that the term "Forced Draught" should only apply to those instances in which the rapidity of combustion is in excess of that usually obtained with natural draught.

There are several methods by which the principle of forced combustion may be carried out, and among the principal, or hitherto most commonly adopted, are:—

Digitized by Google

*First*, Heating the air supply before its introduction to the fuel by utilising the heat remaining in the hot gases after their passage through the tubes of the boiler. This idea has been carried out in great perfection of detail by Mr James Howden, to whom has descended the mantle worn by the late Mr Wye Williams, who preached the "gospel of combustion" with untiring assiduity about half-a-century ago.

A modification specially adapted to the conversion of boilers originally designed for natural draught, or to new boilers where the space is too limited to permit an air-heating chamber, is the introduction of air to the fires direct from the fan through an air casing on the front of the boiler.

This plan, with various adaptations seems to be growing in favour in the North of England, and though other claimants exist, I believe it is generally conceded that Mr Howden originated the use of the casing on the front of the boiler for conducting the air to the fires and utilising the heat radiated from the front portion of the shell. In this arrangement the admission of air to the fuel is through valves, a system which permits the attendant to regulate the rate of combustion by controlling the quantity of air admitted separately above and below the firebars.

*Another* method of forced draught is by supplying the air under pressure to the ashpits of the furnaces: this is a very old way of applying the principle, and I believe was first used, other than experimentally, in America, where it may still be found in operation on board some of the river boats.

This system does not appear to have been very successful on this side of the water until taken in hand by Ferrand, and under the style or title of the Ferrando system seems to have met with a certain measure of success in burning small and inferior classes of coal; but so far as I can learn there is very little reliable information accessible to the public in connection with it, and from what I could gather during an inspection on board one of the ships fitted with it, and a talk with the engineer in charge, its success seemed to be largely due to the very practical manner in which all the details for working have been arranged. A noteworthy feature was the insertion of a glass in the ashpit door. I felt sure on seeing it that this peephole had been the salvation of many firebars.

Digitized by Google

A *third* way of increasing the boiler power by rapid combustion is that known as the closed stokehold system, which has been so extensively adopted in our own and other Government ships. To practical sea-going engineers it is difficult to account for the preference shown by the authorities to this over some of the other methods.

The evil results likely to follow cleaning fires with moderately dirty boilers must be apparent to most practical men, and I think it is difficult to imagine worse treatment to a boiler than to permit a volume of cold air under pressure whose area equals that of the fire-door to rush into the back end of a hot boiler. It is doubtful if any boiler could be constructed to remain tight under such treatment very long, and it is not probable that high rates of combustion (for lengthened periods such as obtain in foreign-going merchant steamers), and the full advantages derivable from a reduction in the size of the boilers which this renders possible, will ever be satisfactorily realised with a closed stokehold, unless means are adopted to prevent the inrush of cold air when cleaning fires.

I noticed on board the City of Paris, before that ship left Glasgow, that some provision had been made for this, and it would be very interesting to know the result. I have little doubt that it is a step in the right direction to enable boilers to work for lengthened periods in a closed stokehold at high rates of combustion. As far as I am aware, the City of Paris was the first ship with a closed stokehold whose smoke-boxes are separated and fitted with dampers in the uptake to regulate the emission from, and consequently the air admission to, each furnace when cleaning a fire.

From the manner in which the working of these dampers was arranged, I felt that possibly the engineer on watch would have to look after the firemen when cleaning a fire, to see that they made use of the appliance, as it would be difficult for them to resist the temptation of leaving the damper open if, when cleaning a fire, such a course would add to the comfortable performance of that always trying operation.

The *last*, but by no means the least, I shall mention will be the system of induced draught by causing a partial vacuum in the uptake by the use of a steam jet or fan, or its equivalent. The steam jet under various forms is probably the simplest, most widely adopted, and best known method of increasing the activity of the fires by quickening the draught; but its use is out of the question in marine boilers, where economy is a primary consideration.

Digitized by Google

On the other hand, I think that exhausting the uptake by mechanical means has much to recommend it, and perhaps I may say that the most painstaking, scientific, and extended series of observations relative to the combustion of fuel under steam boilers ever undertaken under practical working conditions, and placed at the disposal of the public generally, has been in connection with this system in America; and the substantial lesson taught to the observer seems to have been the utility of heating the air supply before it enters the furnace; and after trying various more or less well-known means to obtain economy by the employment of air jets above the fuel, he (J. C. Hoadley, Esq., author of "Warm Blast Steam Boiler Furnaces,") sums up thus:—"Aside from the one conspicuous saving by returning to the furnace in a warm blast a part of the heat of the gases of combustion after they leave the smokebox, no gain of so much as 5 per cent. over reasonably good ordinary practice can be so much as fairly hoped for."

Again, in another place, speaking of a warm blast apparatus (not Mr Howden's, I may remark, but similar in principle), he says:—"This warm blast apparatus seems to afford a means of securing a nett saving of 10 to 18 per cent. over the best obtainable practice with natural chimney draught and with air supplied to the furnace at usual external air temperatures."

But apart from the experience of others, inducing the draught is to me decidedly preferable to closing the stokehold, though one of its most objectionable features is common to both—that is, the absence in any of the present arrangements to efficiently provide against the strong current of cold air rushing through the furnaces and tubes when cleaning a fire; but I do not regard the provision of a remedy for this as offering insurmountable difficulties.

The advocates of induced draught *re* its application to marine boilers point to the results obtained with this system in locomotive boilers ashore; but they do not point out that the working conditions of the two types of boilers are very different, as the locomotive boiler fire is never cleaned when going full speed, because the runs are made short enough to permit this operation to be done during the intervals when the engine stops at a station.

A fan for inducing the draught would probably require to be much larger, or run faster, than one forcing it, as the products of combustion

Digitized by Google

would be more bulky than the volume of air entering the furnaces, and the temperature of the gases dealt with would place the working conditions of the fan at a disadvantage; but an open stokehold is a much more comfortable place for men to work in than a close one, and in discussing the relative merits of any system I don't think that what an eminent North Country engineer calls the "human factor" should be entirely eliminated from our consideration. The dangerous conditions which men work under in close stokeholds have furnished some startling illustrations recently; the details of some of them may be learned from the newspapers.

I have had opportunities in various parts of the world of seeing many of the systems of forced draught which have been fitted in steamers for the purpose of increasing the boiler power, or of economising fuel. Some of these displayed a considerable amount of perverted ingenuity.

One which came under my notice enabled the ship to burn 18 per cent. more coal on a knot less speed; in another one elaborate and expensive apparatus was employed to quicken the draught by sending a jet of cold air into the funnel somewhat in the form of a gigantic steam jet about 9 in. in diameter. Perhaps it is needless to add that this unique method of cooling the funnel failed to produce the effect intended by its sanguine inventor. I have been in some very dissimilar ships which were fitted with forced draught on Mr Howden's system to effect the same objects as the foregoing. Some of these ships were of the type usually described as ocean tramps, others were passenger ships; and my experience leads me to believe that it is well adapted to all classes of ships.

The arithmetical proof which I have seen and heard so often of the small gain derivable from moderately heating the air supply would be more convincing to me if I had never observed the effect which this heating produces in quickening the combustion, or if I had never seen equally satisfactory proof given (with figures) to show that steam could be as economically expanded in one cylinder as in two or more, but some shipowners had the temerity to adopt multiple cylinder engines in spite of the figures, and the result has been the same as it has been in the majority of those ships where Mr Howden's system has been adopted and placed in fair comparison with other ships doing the same work.

Digitized by Google

My first acquaintance with draught produced by mechanical means was with two large boilers constructed to work at 100 lbs. pressure with natural draught, and after working under these conditions about four years were subsequently among the first of those which have been fitted with apparatus to work with forced draught on Mr Howden's system. Each boiler was 16 ft. diameter and 10 ft. 6 in. long over all, containing 284 tubes 3½ in. diameter and 7 ft. 4½ in. long, or 71 tubes to each of the four furnaces. The heating surface was about 2400 sq. ft., and grate surface about 80 sq. ft. to each boiler. These proportions enabled the boilers to maintain steam steadily for ordinary compound engines indicating 1300 horse-power on a consumption of 26 tons fairly good Welsh coal, so that there was not such a large margin of possible improvement to work upon as would be the case in a less economical boiler. When the alteration was made the grate surface was reduced one-third by substituting shorter firebars.

The exceptional nature of the coal (received at Birkenhead) made the result obtained on the first outward voyage to India less favourable than was expected; but as this ship had never burned North Wales coal before, any estimate of the efficiency of the alterations would be questionable if based on this in the absence of more comparative data. Not so with South Wales coal, which was the principal fuel burnt in this ship before the alterations, and my estimate of the utility of these is based on comparisons drawn by observing the consumption of South Wales coal under the different conditions. The Vauxhall coal taken at Birkenhead, and burned as far as Port Said, contained the very large proportion of 36½ per cent. of volatile matter, or about 30 per cent. more than South Wales coal; and as the area for admitting air above and below the fuel was proportioned for the latter coal, it may go some way to account for the disappointing nature of the results obtained with the Vauxhall coal, though the consumption of 1·9 lbs. per indicated horse-power per hour is less, I think, than could be obtained in the same ship at full speed with natural draught.

However, with the South Wales coal taken at Port Said, the consumption was 1·75 lbs. per indicated horse-power, and I was enabled to report a saving of 8 per cent. in favour of the forced draught; but the numerous air leaks in the casing and around the air-heating tubes led me to expect a better result after they were stopped. This belief was justified during the homeward voyage after we had straightened things up a bit in Bombay and Kurrachee. On leaving the latter place for home we

Digitized by Google

received orders to go at 9 knots, and the consumption of South Wales coal taken on board at Perim, and therefore not very fresh, was at the rate of 1·64 lbs. coal per indicated horse-power at this reduced speed when indicating 925 horse-power. On arrival at Port Said we received orders to go full speed to Malta. We could easily have maintained more, but I kept the power down to 1300 for the purpose of comparing the consumption under the conditions which usually obtained with natural draught. I measured and weighed every pound of coal put on the fires during 12 hours, and the result was 26,240 lbs. burned in that time. The power indicated was 1306, giving 1·67 lbs. coal per indicated horse-power per hour, and a rate of combustion of 20 lbs. per sq. ft. of grate area. The boilers had been under steam 20 days at this time, and with the same coal would burn 1·9 lbs. per indicated horse-power with natural draught when maintaining the same power.

This 12 per cent. gain, I thought, was a very encouraging result, especially in face of the fact that a large number of the air-heating tubes were still leaking, which we had neither time nor tools to repair in Kurrachee. During the voyage we had some trouble with the firebars, owing to the very limited area for admitting air between them, and the small air pressure available to make up for the deficiency. The bars were $\frac{7}{16}$ in. thick with $\frac{1}{16}$ in. air spaces between them, and this after a few days' steaming was found insufficient to allow the air to pass freely to the fuel on the bars, especially for fuel containing such a large proportion of volatile matter as the Vauxhall; and after carrying out the orders I received to space them an $\frac{1}{8}$ in. further apart, they bent sideways owing to the lack of lateral support against each other at the middle of their length.

There is little doubt that thin bars are the best for high rates of combustion, as they will remain uninjured where thicker bars would surely burn. This is because the receptive area bears such a small proportion to the dissipating area in thin compared to thick bars. By "receptive area" I mean the area of the top of the bars on which the glowing fuel rests, and through which the heat is principally conducted to the rest of the bar, and dissipated by radiation and conduction from the sides of the bars to the air passing between them. This dissipating surface is practically the same in bars of equal depth, while the receptive area varies in direct ratio as the thickness of the bar.

The principal objection I have heard urged against thin bars is the impossibility of using a pricker without breaking them; but with a closed

Digitized by Google

ashpit a pricker does more harm than good, and I have burned 50 lbs. per sq. ft. per hour without using it. The success which has been obtained with similar bars to those mentioned but with wider air spaces, under exactly similar conditions, shows that this was the right sort of firebar to use if more air space had been allowed—say a space of a $\frac{1}{4}$ in.

For the preservation of the bars with a closed ashpit it is important to pay attention to the manipulation of the valves for admitting the air above and below the fuel, and while the air pressure is on it is necessary to see that one of the bottom valves is always more or less open at the same time as the top one, otherwise the air blowing on top of the fires with no draught underneath will cause injury to the firebars by overheating them. Care should be taken to rake out the ashpit immediately after cleaning a fire, so as to keep the ashes well away from the bars. The firebars should be fitted tight sideways, and after putting in a set of bars, say $\frac{3}{4}$ in. thick at ends, it will be frequently found that after getting in as many bars as possible, a space will be left perhaps $\frac{3}{4}$ in. wide.

Instead of adopting the usual plan of distributing this space between all the bars, it will be found better to fill this space with a couple of thin bars, which will prevent the other bars bending. For this purpose it will be found useful to carry a set of wrought iron bars $\frac{1}{4}$ in. thick. The number required averages about $1\frac{1}{2}$ for each furnace, or 9 for 6 furnaces, and if a little attention is paid in fitting the bars in this manner, their durability will be largely extended and water ashpits be found an unnecessary refinement at rates of combustion certainly up to 50 lbs. per sq. ft., and probably much higher rates could be continuously maintained if the difficulty of removing the clinkers could be overcome.

In working the fires I have found that a thick fire gives better results in ordinary work than a thin one, probably owing to the necessity for opening the fire door occurring less frequently, and the fire not burning in holes and admitting an excessive quantity of air. In large furnaces a fire about 10 in. deep, with a slight slope from fire door to bridge (and, contrary to the usual practice with natural draught, thickest at the bridge end), will give good results. Care should be taken to prevent any opening between the wing bars and the sides of the furnace, as the fires will always burn in holes sooner in the wings than elsewhere.

The great obstacle to the lengthened maintenance of high rates of combustion with ordinary coal, say rates exceeding 35 lbs. per square foot per

Digitized by Google

hour, is the rapid accumulation of clinker. All the movable bars with which I am acquainted offer no solution to this difficulty, as they are quite unsuitable for high rates of combustion owing to the receptive area I have before mentioned bearing a larger proportion in these than in ordinary bars, causing them to get over-heated, and burn or stick in their work. With decent coal an average rate of 30 lbs. per sq. ft. can be maintained, with the fires cleaned at intervals of 12 hours. Some of the inferior coal, however, burned in steamers of the merchant service will not run six hours at this rate. In view of this any contrivance which can get rid of clinker as soon as it is formed will be a great step in advance, and will enable boilers to be made much smaller than they are at present to continuously develop a given power; and bearing in mind the ease with which I have seen 1½ cubic foot of boiler shell develop an indicated horse-power in some of the Clan Line ships fitted with forced draught, I confidently anticipate the time when this proportional capacity of boiler will be accounted a usual standard applicable to large marine boilers of the ordinary cylindrical type, and that this great saving in space will not be at the expense of the durability of the boilers or economy of fuel.

With regard to the durability of boilers working with forced draught, I must say that I have seen nothing to lead me to infer that high rates of combustion are harmful to the boiler, when provision is made, as in Howden's system, for avoiding sudden and violent changes of temperature in opening the fire door; in fact, my own experience points the other way, and riveted seams in the combustion chamber, which could never be kept tight with natural draught, gave no trouble after the forced draught apparatus was fitted. The explanation which occurred to me was that with natural draught a strong current of air passed through the furnace when cleaning a fire and impinged on the seams in question, which were in line with the centre of the low furnaces. With forced draught this current was much less, owing to the obstructions offered by the air-heating chamber in the uptake and the spiral retarders in the tubes, and this reduced current of air did not chill the seams so much as the stronger current.

I think it is very undesirable for one who professes to believe in the utility of forced draught to attempt to discuss the subject publicly without taking notice of a leading article which appeared in the *Engineer* some time ago, in which the statement occurs that "all reason, and analogy, and experience go to show that forced draught cannot be so economical as

Digitized by Google

natural draught." It is much to be regretted that such an extraordinary and misleading assertion should remain so long uncontradicted by one of the many engineers who could have dealt with it in a much superior and weighty manner than I can hope to do. Certainly my own experience, and also that of other sea-going engineers I could name, does not offer any support to such an assertion, as we have seen economical results produced with forced draught on Mr Howden's system which we know could not be approached under similar circumstances with natural draught and the usual rates of combustion.

But it would be unfortunate if we were in the predicament of ghost-seers, who can only relate their experiences without being able to afford a reason to account for the phenomenon they believe they have witnessed, and after endeavouring to show that "everyone's" experience does not point in the direction indicated by the *Engineer*, I will make an effort to prove that the statement that "all reason and analogy" is antagonistic to the economical use of forced draught rests on a similarly slender basis. I take it that the real point at issue is not that more heat or power can be got from 1 lb. of coal by forced than by natural draught under any circumstances, such, for instance, as the very slow rates of combustion which formerly obtained in some of the old Cornish boilers, but that with forced draught a given quantity of fuel can be made to impart a greater percentage of its heat to the boiler, and this in less time than can be imparted by it when burned with natural draught *at the usual rates of combustion such as obtain in marine boilers at present.* I will take for an illustration the representative rates quoted in the article in question, viz., 15 lbs per square foot with natural draught, and twice that quantity with forced draught, which, fortunately for my purpose, happens to be about the mean rate of combustion obtaining in the boilers of the Inman and International Co.'s s.s. Ohio. The lower rate mentioned first is that usually obtained with South Wales coal in ordinary sea work at full power with natural draught, and can only be maintained for lengthened periods under these circumstances, with boilers having tubes less than 30 diameters long, and the products of combustion enterirg the base of the funnel at 700° after a few days steaming.

Now, is it not quite reasonable to conceive that by increasing the heating surface by lengthening the tubes or otherwise, and using a fan to promote the draught, that the temperature of the escaping gases would be reduced by having to remain longer in contact with the metal surfaces,

Digitized by Google

and that this reduction in the funnel losses would augment the efficiency of the boiler? But a similar result can be obtained in other ways, without employing tubes of excessive length, by placing various impedimenta in the path of the gases between the furnace and the funnel.

This idea has been carried out in several ways, and among them Mr Howden seeks to attain this object by inserting twisted strips of steel in the tubes, which practically rifles each one, and causes the issuing gases to traverse a spiral path, tending to bring every portion into intimate contact with the interior surface of the tube before leaving it. After this its temperature is further reduced by passing through a number of short tubes in the uptake on its way to the funnel. It is around the outside of these short tubes that the air from the fan circulates and becomes heated on its way to the fire. The efficiency of this process in reducing the temperature of the issuing gases may be judged from the fact that the temperature at the base of the funnel in the "Ohio" averaged 465° Fah. when burning American slack at the rate of 31½ lbs. per square foot per hour, with an ashpit pressure of 1⅛ in., and less than 400° when burning 28 lbs. Welsh coal per square foot with about ½ in. water guage pressure in the ashpit. It never reaches 500° throughout the whole run across the Atlantic with the highest rates of combustion obtained in this ship.

The principal gain derivable from properly applied methods of forced draught is due to the greater range of temperature between the furnace and the funnel, and the smaller amount of heat carried away from the latter by the products of combustion, owing to their low temperature and the reduction in their weight consequent on the more restricted supply of air to the furnaces to consume a given weight of fuel when worked with forced compared to the quantity found to be necessary when working with natural draught at usual rates of combustion.

Assuming for our purpose that the theoretical quantity of oxygen necessary for the complete combustion of 1 lb. of coal is contained in 12 lbs. of air, it is generally admitted that twice this quantity is usually required for furnaces working with natural draught under favourable conditions, and an eminent authority, who has recently investigated the matter, states that "it is under-stating rather than over-stating the matter to say that the average of good practice would show a double supply of air." Again he says, "Doubts may be entertained as to so large an excess of air as 150 per cent. occurring in practice. In fact, it is very common. It is not easy to carry on complete combustion by means of

Digitized by Google

natural draught with less than 100 per cent. in excess." Now, with forced draught it has been abundantly proved that, to say the least, equally perfect combustion can be attained with 18 lbs. of air, and if the products of combustion be discharged into the chimney with the same temperature in each case, the loss due to the heat carried away by the escaping gases is reduced in ratio from 25 to 19. In practical work this ratio is greater, owing to the chimney temperature being lower with forced than with natural draught at similar rates of combustion.

Taking the approximate figures given in the *Engineer* for the specific heat of the escaping gases, the loss per lb. of fuel with natural draught and 700°, assuming that of the air to be 80° before entering the stokehold, will be (700 – 80) ·23 × 25 = 3565 units, or about 25 per cent. of the total heat of the fuel. Comparing this with an actual case of forced draught, with the air entering the fan at the same temperature, or 80°, and the products of combustion entering the funnel at 400°, the loss would be (400 – 80) ·23 × 19 = 1398 units, or only about 9 per cent. from this cause for coal of the same calorific value. This low funnel temperature, with the high furnace temperature consequent on high rates of combustion, is one of the distinguishing characteristics of Howden's system, and no other system of forced draught is likely to be economical where these objects are not attained.

Of course, in estimating the net saving effected, the power for driving the fan or other appliance used for promoting the draught should be taken into account. In the "Ohio" it takes 10 indicated horse-power to drive the fan when burning 3300 lbs. per hour, assuming each indicated horse-power at the fan engine to cost 30 lbs. steam or 300 lbs. steam per hour, equal to, say, 300,000 heat units, or 91 heat units per lb. of coal, or less than 1 per cent. of the heat given off by it, leaving a net reduction in the funnel losses of over 40 per cent., and enhancing the value of the fuel about 15 per cent., a result which would be improved if the fan was driven by the main engines, as the power driving it would be produced more economically. This question of fan driving is beginning to attract some of the attention which its importance deserves, and the barbarous practice of putting high-speed engines in the stokehold is being abandoned after some unfortunate experiences. In some ships fitted with forced draught it is probable that a considerable portion of the benefit arising from the application of the principle is sacrificed by using wasteful engines to drive the fans. The most perfect installation of fan-driving gear I ever saw was on board the Italian steamer I have before referred to as being fitted with the Ferrando system.

Digitized by Google

From the foregoing it will be seen that it is important to limit the supply of air as much as possible, consistent with the proper combustion of the fuel and maintenance of steam. As a rule this limitation of the quantity of air only applies to that portion admitted above the fuel, and a practical method of determining its amount is to close the upper air valves until a small quantity of smoke is perceptible issuing at the top of the funnel. It will generally be found more economical to show a little smoke than none at all; but some good Welsh coal will not show smoke with forced draught with the upper air valves closed altogether, but it is always advisable to keep them a little open when under way to prevent the furnace fronts becoming overheated. I am not acquainted with any simple method of practically determining the quantity of air passing into marine boiler furnaces—an anemometer placed in the fan discharge pipe is not always reliable, as the velocity of the air is not always uniform throughout the area of the same section of the pipe, and in a square vertical pipe leading from a fan I have observed a difference of pressure, shown by a water gauge, of 20 per cent. simply by changing its position on the same horizontal plane; on the other hand, the quantity of gas discharged from the funnel will always contain more or less air, which has leaked through smoke-box doors and uptake joints.

In computing the amount of air passing into the furnace, I have tried to avoid errors due to leakage out of air casings or into uptakes, by estimating the velocity at which the air passed through the valves immediately at the front of each furnace. I am aware that such a method can only be approximate, but I think the errors arising from such a method of calculation will not tend to under-estimate the quantity of air passing into the furnace, and the result arrived at will be the maximum quantity that could possibly pass in under the observed conditions.

For illustration I will take an actual case where the air pressure at the fan was $2\frac{7}{8}$ in. in a water gauge on the casing in the front of the boiler it was $1\frac{1}{4}$ in., the mean pressure in the ashpits was $\frac{9}{16}$ in., and in the air boxes above the fire-bars it was $\frac{7}{16}$ in. with the top valves half shut. This makes the mean difference of pressure between sides of valve orifice above the bars $\frac{13}{16}$ths, and below the bars $\frac{11}{16}$ths; the temperature of the air in the casing and entering the valves was 206° Fah., or 667° absolute. The volume of 1 lb. of air at any temperature within

Digitized by Google

probable limits of observation may be simply calculated with sufficient accuracy if we assume it to occupy 1 cubic foot for every 40° absolute temperature; therefore, each lb. of air at 667° will occupy $\frac{667}{40} = 16{\cdot}7$ cubic feet. The pressure per square foot represented by every $\frac{1}{16}$th difference in the levels of a water gauge equals 0·325 lbs.; for $\frac{13}{16}$ths the pressure will therefore be $0{\cdot}325 \times 13 = 4{\cdot}225$ lbs., and for $\frac{11}{16}$ths will equal 3·575 lbs. per square foot. Multiplying these pressures by 16·7 gives the height of a column of air at 206° Fah. and one square foot in section, whose weight would balance a column of water same section and as high as the difference in levels shown by the water gauge.

And in calculating the velocity of the air passing the valves, I have used the approximate formula for calculating the velocity of falling bodies, viz., Velocity $= 8\sqrt{\text{height}}$. When the height is that of the column of air in question, the velocity in the present case will be 67 feet per second above the bars, and 61·6 feet per second into the ash-pit. As the area for admission through the valves was 0·117 and 0·372 square feet respectively, top and bottom the quantity of air passing will be $0{\cdot}117 \times 67 = 7{\cdot}839$ cubic feet over, and $0{\cdot}372 \times 61{\cdot}6 = 22{\cdot}915$ cubic feet under bars, making a total of $30\frac{3}{4}$ cubic feet, or 1·84 lbs. of air passing into each furnace per second. The coal burned in nine furnaces was $3089\frac{1}{2}$ lbs. per hour, giving 19·3 lbs. of air per lb. of coal. If we assume $\frac{9}{10}$ths as the co-efficient of efflux (perhaps the high ratio of perimeter to area of openings warrant more, being $1\frac{1}{4}$ inch of perimeter per square inch of area), the quantity of air will be less than 18 lbs. per lb. of coal burned at the rate of 27·8 lbs. per square foot of grate per hour. The temperature of the air entering the fan was 77°, and the temperature at which the products of combustion entered the base of the funnel averaged 435° during the twelve hours in which every lb. of coal put on the fires was carefully weighed. The coal burned was a mixture of Welsh of fair quality, with American slack of an inferior description, the latter being in proportion of about 25 per cent.

As these observations were made when the ship was eight days out from port, they will very fairly indicate what may be expected under average conditions, and will tend to show that the calculation I have made elsewhere of the possible saving derivable from the use of forced draught was not an exaggerated estimate, but a fair representation of

Digitized by Google

what has already been accomplished under everyday working conditions. Under suitable conditions these results can be always attained in any ship. Among the necessary conditions, and perhaps ranking first in importance, is the diameter of the furnace. In designing boilers destined to work with forced draught at high rates of combustion, the advantages of a large furnace should not be lost sight of.

I have often heard expressions of surprise from engineers concerning the want of uniformity in the results obtained in terms of indicated horse-power per square foot of grate on board different ships whose boilers contained essential differences in this as in other particulars. A boiler with corrugated furnaces cannot be worked as comfortably and economically at high rates of combustion as one whose furnaces are plain and of the same mean diameter. The effective diameter of a corrugated furnace for firing purposes is not its *mean* but its *smallest* internal diameter, and it is surprising to note the difference which a few inches in the diameter of the furnace makes to the quantity of coal which can be put on the grate at each firing, and when there are many fires fronting each other, as in a fore and aft stokehold, an interval of twenty minutes is the least time in which this operation can be performed to enable the men to work properly and without undue interference one with another, as the fires require "raking," and, when getting dirty, "slicing," during this interval, the firemen will have to be pretty constantly at work to keep the fires in good order.

When the average rate of combustion is 30 lbs. per square foot per hour, the actual rate in individual furnaces will vary about 25 per cent. each side of the mean, the clean fire burning about 38 lbs. per square foot for a few hours, the length of time depending on the quality of the coal. Taking the density of the coal when loosely thrown on the fire at 45 lbs. per cubic foot, each fire will burn on an average a layer of fuel 8 in. deep, the clean fires burning a layer about 10 in. deep per square foot per hour. To obtain the best results, the fresh coal should not be thrown much past the middle of the furnace, so as not to cover more than two-thirds the grate area, which makes the thickness of the layer of coal put on this part of a clean fire at twenty minute intervals about 4½ in., and as the fire should not be less than 6 in. deep before charging (to keep steady steam), the depth of fuel on the bars will be 10½ in. after putting on the coal, and this will swell to above 12 in. on becoming heated. If the top of the grate bars is 3 in.

Digitized by Google

below centre line, a space of 11 in. will be left between the fuel and the crown of a 40 in. furnace, and my observation leads me to infer that this is the least diameter which may be expected to properly and economically maintain with coal of average quality for long voyages a mean rate of combustion of 30 lbs. per square foot per hour, or 23 indicated horse-power per square foot of grate (when the grate does not exceed 1½ diameter long) with fairly economical triple engines.

I am quite persuaded that superior results can be got from larger furnaces, as the distance from bottom of furnace to bottom of bars need not exceed 12 in., and if possible should not be much less, so that any increase in diameter after 40 in. may be wholly utilised in increasing the distance from the fire bars to the crown of the furnace, and only those whose experience has been similar to that possessed by the members of this Institute can be fully alive to the great difference which an inch or two here makes to the fireman. To supply 18 lbs. of air per lb. of fuel when burned at the rate of 30 lbs. per sq. ft., the theoretical delivery at the fan at the temperature of 80° would be 121½ cubic ft. per sq. ft. of grate per minute, but it is always advisable to provide a reserve of 50 per cent. in the capacity of the fan in view of contingencies arising from air leaks, increased temperature, different qualities of coal, etc., so that a provision of 180 cubic ft. per minute per sq. ft. of grate will be found amply sufficient to secure good results. The pressure at which this quantity of air should be delivered from the fan depends on the size and shape of the air passages leading from the fan into the furnace; these should lead as straight as possible and be of ample area. When heated air is supplied to the fires, as in Howden's system, the ashpit pressure for this mean rate of combustion may vary from ⅜ in. to 1 in., according to the quality and structure of the coal used. Small caking coal, such as that burned in the American mail steamers on the return voyage, requires about twice the ashpit pressure that suffices for good Welsh coals, and, as a rule, the air pressure at the fan may be estimated at three to five times the ashpit pressure, to overcome resistances due to friction and bends in air passages, heating chambers, etc.

Throughout this paper I have mentioned cleaning fires so often that I fear its repetition may appear tiresome, but I entertain a strong opinion that the primary difficulty to be overcome in the continued maintenance of higher rates of combustion than any I have yet mentioned—such, for instance, as obtains for limited periods in locomotive and torpedo boat boilers—is not to be looked for in the tubes and tube plates (as Mr

Digitized by Google

Howden has already shown how these may be kept tight), but in the frequency of the necessity arising for removing the incombustible constituents of the fuel from the grate bars to prevent the furnace choking up, and to provide free access for the air to the fuel. This operation at present is performed in the great majority of cases in the same primitive manner as it was in the days when men first began to "go down to the sea" in steamships.

The application of forced draught marked the first important change which has affected the operations of the stokehold since steam was first introduced, and I have little doubt that the genius of the engineers who have affected such great and important changes in the engine-room will not be baffled by the mechanical difficulty of getting the refuse out of the furnace without practically placing the latter *hors de combat* while it is being done.

There is another point which I think I ought to refer to, as it may tend to correct an impression which may be generally prevalent, since so eminent an engineer as Mr Parker, of Lloyd's, gave utterance to it some time ago. I allude to the idea that the forced draught apparatus, as fitted by Mr Howden, was not successful until improved upon by and at the expense of those owners who adopted it. Mr Parker cited the case of the "Ohio" as illustrative of his statement, but I can respectfully assure him that he was mistaken in this matter, and that no alteration was made in any part of the forced draught apparatus except the fan engine, and that no expense was incurred by the owners in altering a single detail which may have influenced the difference which was observable between the first and subsequent voyages of this steamer.

The difference was caused partly by the substitution of more efficient fan-driving gear, but principally by Mr Howden taking steps to ensure that his system was worked in accord with his instructions. When this was done, the result placed the "Ohio" in the position she now occupies as the most speedy, powerful, and economical passenger ship of her size crossing the Atlantic. The owners were so well pleased that they contracted with Mr Howden to refit a sister ship in a similar manner; but before finally deciding on this step, they satisfied themselves by a trial on board the "Ohio," under circumstances similar to those which obtained during ordinary work. This trial took place almost exactly two years ago, and will be better described in Mr Howden's own published words, as follows:—

Digitized by Google

"As is well known by those experienced in the Atlantic passenger service, it is difficult to arrive at a correct estimate of the actual consumption of the propelling engines when steam is being supplied from the main boilers at the same time to a large number of auxiliary engines, and also for cooking and heating purposes throughout the ship, if the total consumption is expressed in terms of the indicated horse-power of the main engines only. Being conscious that the more accurately the tests were made the more clearly would my undertaking of 1¼ lbs. per indicated horse-power be found about the actual consumption of the main engines at sea, I have been always most desirous of having the actual consumption in the 'Ohio' tested by careful weighing over a considerable period. The owners of the steamer have kindly favoured me in doing this by their superintending engineer, Mr Doran, and assistants, using all precautions possible to ensure accuracy, and they have furnished me with tabular particulars of the trial from which I give the results.

"The trial took place on 26th Oct. last, under the following circumstances and conditions:—It was made on the outward passage between Holyhead and Queenstown, and lasted two watches, or eight hours. The sea at the beginning of the trial was comparatively smooth, but gradually got rougher, ending in a gale with the ship running against a head wind and sea. The firemen on first watch had never before worked with forced draught, and consequently had something to learn. On the second watch two of the three firemen had been in the ship on a previous voyage. Three fires were cleaned each watch. Diagrams were taken every half hour, and record of steam pressure on gauge made every quarter of an hour. The mean revolutions were taken from the engine counter divided by the minutes of the trial. The mean indicated horse-power was calculated from sixteen sets of diagrams taken, each of which was calculated and recorded separately. The indicated horse-power taken is that of the main engines only, no allowance being made for the auxiliaries or heating of the ship or steam cooking purposes. The auxiliary engines working during the trial were the following:—The fan engine, the centrifugal pump engine, two Weir's feed engines—all these with full pressure steam; and with reduced steam pressure, the steering engines, double cylinder Worthington pump, electric light engine, also steam cooking and heating stoves throughout the ship. By an accidental occurrence the metallic packing of the low pressure piston rod got out of contact with the rod before starting consumption trial, and was not put in order until after the trial was finished, causing

Digitized by Google

a blow-off of steam every revolution and an inrush of air whenever the pressure in the cylinder got below the atmosphere. The consequence was, that to maintain the vacuum at 26 in. the centrifugal pump engine had to be run at 196 revolutions per minute, or about 20 per cent. above its usual speed for a 27 in. vacuum. Besides the reduced vacuum, the feed-water was necessarily colder than usual. During the first four and a half hours of trial all the auxiliary engines, the steam cooking and steam heating throughout the ship, were supplied with steam from the main boilers only. For the last three and a half hours of the trial, after steam had been got up in the donkey boiler, only the auxiliary engines worked with full pressure were supplied from the main boilers. During the first four and a half hours, though the water in the exhaust steam was for the most part returned to the condenser, the waste water from the steam throughout the ship was such as to require the feed of the main boilers to be supplemented all the time by water from the sea. Under above conditions, the mean of the sixteen sets of diagrams of the main engines was 2144 indicated horse-power, and the mean pressures of steam on pressure gauge at the half hours when the diagrams were taken was 147·3 lbs. The mean pressure of the steam during the trial on the quarter hour records was 148·4 lbs., showing that the times at which the diagrams were taken synchronised with periods when the steam pressure was under the average, and consequently they give a power somewhat under the true mean. The total coal consumed for all purposes in the main boilers as explained above during the eight hours was 23,856 lbs., or 2982 lbs. per hour, which, divided by the mean of 2144 indicated horse-power of main engines, gives 1·39 lbs. per indicated horse-power per hour. I do not here attempt to make any calculation of the reduction to be made on this item to arrive at the actual consumption per indicated horse-power of the main engines alone, and leave this to be done by your readers in the light of the facts stated; but I do believe that few of those qualified to judge will put it at much, if anything, above the 1·25 lbs. of my guarantee; and I will say further that probably no sea-going steamer, on her ordinary voyage, was ever before so carefully and accurately tested as to consumption."

This trial provided the owners with conclusive proof that the 18 per cent. reduction in the machinery and boiler and bunker spaces was also accompanied by a gain of more than 16 per cent. in the power obtained from just half the number of furnaces. The "Illinois" provided Mr Howden with a better opportunity of showing the advantages derivable

Digitized by Google

from the adoption of his system, and he contracted to develop the same power as in the "Ohio" with only two boilers and six furnaces, the machinery and bunkers to occupy 25 per cent. less space than they do at present. A sister ship to these, the Indiana, is to be converted into a cargo ship, and the 1200 horse-power for propelling her is to be generated from one boiler only; but as she is to ply in the North Atlantic, this power will probably be exceeded. I understand that the first Clan Liner fitted with forced draught, which has completed a long voyage in a warm climate, averaged 1050 horse-power from one single-ended boiler; but the testimony of the owners with reference to this voyage will be more interesting on this point, and I will now conclude this paper by giving it, with a tabular statement appended, showing the saving in space effected in some of the best known steamers which have been or are now being fitted by Mr Howden on his system:—

Glasgow, 17th June 1889.

Messrs James Howden & Co., 8 Scotland Street.

DEAR SIRS,—In reply to your inquiry for particulars of the results of the first round voyage of the s.s. "Clan Gordon" since her engines were tripled by you and fitted with your forced draught, also comparative results of similar voyages made before refitting, we have pleasure in appending the particulars you request:—

| | | |
|---|---|---|
| Mean time under steam of three voyages before refitting, | 2568 | hours. |
| Time on similar voyage after refitting, - - | 2052 | ,, |
| Time saved per voyage by refit, 21½ days, or - - | 516 | ,, |
| Mean total consumption on three voyages before refitting, | 1844 | tons. |
| Total consumption on voyage after refit. - - | 1440 | ,, |
| Saving in coal per voyage by refit, - - - | 404 | ,, |

It is fair also to mention that the engines before refitting were highly economical and in first-class order, the last voyages being performed quite equal in regard to time and economy with the first voyages of the steamer.

The engineers and firemen on board had no previous experience of working forced draught before sailing, so that we expect that the high results already obtained will even be surpassed on the present voyage

Digitized by Google

with the further experience gained in working forced draught. The voyages made are from Glasgow, *via* Liverpool, to Cape Town and South African ports, thence to Coconada on the Madras coast, returning to London *via* the Suez Canal, a distance averaging fully 20,000 miles.

We must congratulate you upon the remarkable results which have been obtained.—Yours faithfully,

(Signed) CAYZER, IRVINE, & CO.

| Steamers | Dimensions. | Machinery & bunker space before refit, lengthways of vessel. | Machinery & bunker space after refit. | Reduction in space lengthways in ship. | Percentage of reduction boiler room. | I.H.P. before refit. | I.H.P. after refit. |
|---|---|---|---|---|---|---|---|
| | | Feet | Feet | | | | |
| City of Venice, - | 379 × 38 × 29 | 80 | 68 | 12 | 28* | 1350 | 1700 |
| Ohio, - - - | 343 × 43 × 34·6 | 86 | 70 | 16 | 26 | 1850 | 2150 |
| Austrian, - - | 319 × 38·5 × 32·5 | 73·6 | 45 | 28·6 | 54 | 1150 | 1400 |
| City of Canterbury | 379 × 38 × 29 | 80 | 64 | 16 | 37 | 1350 | 1700 |
| Illinois, - - | 343 × 43 × 34·6 | 86 | 64 | 22 | 38 | 1850 | 2200 |
| Sarmatian, - - | 370 × 42 × 35·6 | 124·3 | 49 | 75·3 | 63 | 2000 | 2200 |
| Indiana, - - | 343 × 43 × 34·6 | 86 | 44 | 44 | 67 | 1850 | 1200 |
| Clan Gordon, - | 305·6 × 34·9 × 24 | | | | 28 | 750 | 1050 |

*Boiler Room 4 ft. longer, or 20 per cent. larger than necessary for boilers, to allow deduction for tonnage.

## CHAIRMAN'S REMARKS.

(Mr JAS. ADAMSON).

It is with great pleasure and satisfaction that I have listened to the paper prepared by Mr Williams. We are all indebted to him, I think, for coming such a distance, and also for the careful way in which he has prepared his paper and put it before us. I wrote to Mr Howden and invited him to be with us, but received a reply saying he regretted very much that his engagements otherwise would not allow him to be present. I regret that Mr Manuel also has been prevented from attending. The "New York City" has been mentioned, and I hope Mr Nicholson will be here and give us the benefit of his experience. One or two points upon which Mr Williams has remarked in his paper will readily provoke discussion. I think it will be well if we can rise as

Digitized by Google

quickly as possible to the occasion and save time. We have an hour and a half to-night which I think we can spend very profitably on this subject. Mr Williams has referred to the steam jet and induced draft, hot and cold blast, and closed stokeholds. Many of us have had a painful experience of leaky backs in the combustion chambers due to the cold air getting into the furnaces when cleaning fires, or opening the doors with a full head of steam. Mr Williams has referred several times to the cleaning of fires, and I think most of us can endorse the opinion as to the importance of having as little of it as possible. The whole subject of forced draught will probably come before us again on some future occasion, and I will now ask members to rise and speak upon the subject-matter of the paper.

Mr GRAY—I do not intend to speak so much to-night as I have been doing at previous meetings. I was not here at the beginning of the paper, but I will try and read over the early portion of it; meantime, I think Mr Richardson has something to say which will show that forced draught is not altogether the greatest improvement of the day for boilers.

Mr WILLIAMS—I would like to know if Mr Gray refers to a certain ship being a failure. I happen to know about most, if not all, the ships which have been fitted, and shall be glad if anyone can point out how forced draught has been a failure, and I will discuss the matter with them.

Mr GRAY—I did not mean my remarks to apply to any system or ship in particular, but to what I understand Mr Richardson may have to say

---

## Mr RICHARDSON'S REMARKS.

It was not my intention to speak at this meeting to-night, for I am sorry to say I labour under the same disability as a large percentage of the members of this Institute, namely, the inability to express my thoughts when speaking in public.

However, as I have risen, I may be allowed to say a few words. Mr Williams has stated in his paper:—"One of the greatest disad-

Digitized by Google

"vantages under which forced draught of any kind laboured was the "great influx of cold air into the furnace, combustion box, and tubes, "when a fire was being cleaned;" also that "he was not acquainted "with a movable bar which could remove the clinker and other refuse "of combustion in a way to get over the difficulty of cleaning fires."

I may state that there are several firebars in the market which are supposed to overcome this evil, but in the most of cases these have to be manipulated by the firemen; and we, as engineers, know that any patent which requires the attention and regulating by firemen on watch, would also require an engineer to ensure its efficiency. A firebar has come under my notice on several occasions which entirely does away with cleaning fires, and is perfectly automatic in its action. In proof of this, a few days ago, the superintending engineer of a very large shipowning firm in London showed me a letter he had just received from the chief engineer of one of their steamers; in this letter he stated that these bars had given him the greatest satisfaction, and that during a voyage to Australia, Japan, &c. (using North Country, Welsh, and Japanese coal), —extending over six months—they had not once cleaned a fire, and would require no new bars, as not *one* bar (out of six furnaces) had gone wrong. He also stated that the revolutions previous to the bars being fitted were 54, and speed 9·7 knots, while the revolutions were now 57, and speed 10·25 knots, that the firemen have much easier work now than formerly, and there was no trouble in keeping the steam at a steady pressure even in the Red Sea and the Tropics.

Mr Williams states that "with Howden's forced draught 23 indi-"cated horse-power per sq. ft. of grate surface can be got." I take it this is the maximum, and not the average indicated horse-power. Well, with these bars the patentee will guarantee as a minimum average all through with natural draught to get 15 indicated horse-power per sq. ft. of grate surface. Looking at these facts, combined with the very much greater wear and tear and general deterioration in boilers where forced draught is used than is the case with natural draught under any circumstances, I am of opinion that a firebar of this description is very much better than forced draught.

Mr Williams says:—"In his experience" (which doubtless has been very great) "he has not found the boilers in any worse condition, with "respect to deterioration and corrosion, than he had found in other "boilers under natural draught." I have had some experience of forced

Digitized by Google

draught, both in the closed stokehold and other systems, fitted by some of the best engineers in the country, and I am sorry to say my experience has been the very opposite to that of Mr Williams.

---

## Mr J. MACFARLANE GRAY'S REMARKS.

I have been much pleased with Mr Richardson's description of the automatic firebars. With that system, and a closed stokehold, and forced draught, the difficulty about cleaning fires would be got rid of entirely, and the stokers would have a comfortable job. Unfortunately, however, the 25 per cent. of waste heat which has been mentioned by one of the speakers would still be passing away. It is much to be regretted that shipowners could not afford to neglect that loss of heat, because there seems to be no other way of recovering any portion of it except by the plan described in the paper—heating the air for the furnaces by that waste heat. Wherever boilers are worked to produce the maximum amount of steam, as for example in the Atlantic mail steamers, it appears to me that heated forced draught must involve a great increase of stokehold temperature, and must intensify the hardship of life to the firemen. I understand from the paper that the "human nature" element has been well considered in the designs particularly described by the author, but I cannot see how the increase of discomfort could be wholly avoided in any case where the full steaming capability is enforced.

It is sometimes asked, why is the heating surface of the boiler not increased, and in that way the temperature of the gases reduced, and the draught maintained by a fan? The efficiency of heating surface depends upon the differences of temperature between the gases and the water in the boiler. Very little steam is produced from the last foot of length of the tubes now, and an enormous increase of heating surface would be required to make any considerable reduction of funnel temperature. The increase of steam pressure in the last 25 years has increased the temperature of the boiler water 100°, and by so much reduced the effective head of temperature at the heating surfaces, and added to the difficulty of abstracting the heat from the gases. In the system described in the paper the in-coming air, at a temperature initially nearly 300° lower than the boiler water, is substituted for the boiler water, and the heating surface is thereby rendered more efficient,

Digitized by Google

and the temperature of the gases can be therefore greatly reduced, the heat abstracted being utilised. The reasoning is clear enough that there must be a proportionate economy realised wherever the system of heated forced draught is properly applied.

I have sometimes heard remarks made by engineers about forced draught practice with which I could not altogether agree Probably what the speakers meant was right, but the idea conveyed by the words seemed to me to be incorrect. Some engineers with forced draught keep the funnel damper only about one-eighth open, "to take as much of the velocity out of the gases as possible." I cannot understand how that may be; I fancy it is meant to keep the gases a longer time in the boiler spaces acting on the heating surface. The time of action of the gas in seconds is found by dividing the weight of gas in the boiler spaces from front smokebox to firebars by the weight of gas passing per second. The pressure of the gas in the boiler spaces varies only an almost infinitesimal amount by partially closing the damper, and the only means of increasing the weight of gas in the space is therefore the reduction of the temperature. If closing the damper a little causes a marked difference in the abstraction of heat, there must be an explanation for it unknown to me. I think that the explanation of the damper closing is that, in the case referred to, the forced draught was unnecessary, and the closing of the damper merely counteracted the action of the fan. The "retarders" mentioned in the paper, the spirals placed in the tubes, seem to me to have been named improperly. If retarders are necessary the head of pressure producing the draught must be too great. I think that there might be a beneficial effect from the spirals acting as radiators, for a heated gas does not radiate as well as a heated solid body does. In comparing different pressures of forced draught it is important that the total effective pressure should be considered, and not merely the pressure in the ashpit above that in the stokehold. The effective head is the difference between the pressure in the smokebox, say 0·3, and the pressure in the ashpit, say 0·4; or 0·7 inches of water column. The weight of a column of air 70 ft. in height at 77° Fahr., and atmospheric pressure, is the same as that of a column of water of the same section 1 in. in height. If the column of air is heated to 615° its absolute temperature is doubled, and its weight is then equal to that of a column of water only half-an-inch in height. The over-pressure of the external air is then $= \frac{1}{2}$ in. of water column. The best temperature for draught is a little less than this double temperature, and at a higher temperature the volume of the gases increases in a higher ratio than the

Digitized by Google

velocity due to the increased difference of pressures. Efficient natural draught may therefore be taken to be never more than one-sixteenth of an inch of water column for every 10 ft. of height from smokebox to funnel top. It is with this that the forced draught pressures ought to be compared. A year ago a patentee of forced draught laid before me his plans, according to which he proposed to apply = 10 inches of water column, believing that the natural draught was usually not more than 7 in. of water column. He had largely advertised and claimed to have been very successful in effecting economy, and yet that was what he thought, *i.e.*, natural draught was about 7 in. of water column. The paper which has been read to us is not open to any such criticism; it appears to be full of reliable information, and if the increased stokehold temperature could be avoided, I would wish the system great success.

---

## Mr F. W. SHOREY'S REMARKS.

I did not intend to speak upon this subject this evening, as my knowledge of forced draught is very limited, and what little I do know has been obtained from books.

Some of the remarks that fell from Mr M'Farlane Gray's lips have led me to rise and ask a question or two. Mr Gray has said that the heating surfaces in a boiler were the furnaces, the combustion chambers, and the tubes; and that although the tubes had the greatest amount of surface they did not impart the greatest amount of heat to the water. He further said that Mr Wye Williams states that the most heat was derived from the furnaces next the combustion chambers, and least from the tubes.

Now if I understood Mr Williams' paper correctly, I gather from it that Mr Howden had arrived at the same conclusion as Mr Wye Williams; and to prevent the heated gases passing too rapidly through the tubes, he had inserted in them strips of steel twisted into spiral forms so as to somewhat retard the speed of these gases through the tubes, and also to bring them in contact with the whole of the tube surface by causing the gases to follow the retarder, thus causing the tubes to impart more heat.

Digitized by Google

If such is the object of these retarders or spiral strips, which may doubtless be beneficial, I should like to ask Mr Williams if these retarders would not cause the tubes to become choked, and also how he would manage to keep them clean; as it appears to me they must become quickly choked, owing to the obstruction in the tubes.

---

## Mr SAGE'S REMARKS.

I believe Mr Williams referred to my having some slight knowledge of this subject. The two ships fitted under my superintendence (I am speaking now of tramp ships) were not a success, although both of the ships had boilers built on purpose. They had the usual size of boilers. I had a letter from the chief engineer of one of them saying that the forced draught had not effected any saving. They could steam well with Welsh coal, but they give as good steam with the same quantity of North Country coal. I do not say that it is owing to any fault in the system, because I am inclined to think that Howden's is one of the best systems of forced draught. The ships did not get very far before the fan engines broke down, and the voyage was completed with natural draught, which played havoc with the thin forced draught firebars. These steamers were fitted under Mr Howden's own superintendence, and had one of his own engineers out of the "New York City," who did worse during the voyage he was in charge than the engineer of the other ship who had no sea experience of the system. We had a great deal of trouble with the boilers. Considering the extra expense and cost of repairing, I for one would not venture another vessel to be fitted with forced draught, although I would give Mr Howden's system the credit of being the best I have seen. My experience has been very small, but such as it is you have the benefit of it.

---

## Mr RUTHVEN'S REMARKS.

There is one thing I wish to speak about in connection with the blast generator—that is multiplicity of fans. My father tried this many years ago, and it answered well. It was a system of one fan taking the air from another. He used as many as three fans; the first discharged into the second, and the second into the third. I think this might be tried with advantage with a much reduced speed of engine.

Digitized by Google

## Mr BRUCE'S REMARKS.

I have been desired by an engineer in Glasgow (a namesake of the author of this paper) to bring before you an improved method of applying heated air under pressure for the combustion of fuel. However, I beg to leave this for some other occasion, as time is too short to-night, and explanation would be more interesting when accompanied by the result of actual experience. It may be mentioned, however, that several engineers, expert in this subject, have expressed favourable anticipations for Mr Henry Williams' arrangement.

This paper is of importance inasmuch as it comes from a practical man, and one who understands what it means to work in a stokehole, and I can freely state that so far as the paper has reference to the general working of Howden's method of applying heated air under pressure to furnaces in an open stokehole, what the author has stated is confirmed by my own observations of its operation in some of the steamers he has mentioned.

In regard to the fan engines, and complaints as to the working of these engines, as you all know this is a mere matter of detail. I lately saw a fan and engine at work at Messrs Hawthorn, Leslie & Co.'s, Newcastle-on-Tyne; the engine has three cylinders working compound and coupled direct on to the fan shaft; the engine running 600 revolutions per minute, steady, and quite cool; the whole arrangement taking up very little space, and very light.

The "Rotary" type of engine is being revived, and we may shortly hear some interesting accounts of an improved form of this oldest of all types of steam engine, with reference to its application to fans and dynamos.

In reference to the saving of space and weight by the use of forced draught in ordinary merchant steamships, such as the author has alluded to, I venture to think that he claims too much, for any saving of space or weight by using forced draught can only be effected in the *boiler* compartment. As in the "Ohio," single-ended boilers may take the place of double-ended ones, thus saving the space of one stokehole; and in other steamers one boiler may replace two, or by other arrangements space may be saved. In the case of the "Ohio" the space and weight saved and claimed to be saved by the application of forced draught is

Digitized by Google

not fairly stated. The old compound engines, having cylinders 57 in. and 90 in. diameter by 48 in. stroke, and indicating 2100 horse-power, took up large space, and the boilers were double-ended. When these compound engines and boilers came to be replaced by modern propelling machinery of equal power, her owners determined that they would endeavour to augment the economy of fuel derivable by adopting triple-expansion engines, by applying an approved arrangement of forced draught; therefore the original three double-ended boilers were replaced by three single-ended ones—thus dispensing with *one* stokehole and throwing the space of that stokehole into the cargo-carrying space of the ship.

The owners also determined to further augment the cargo capacity of the ship by using as short an engine as it was possible to get, using three cranks and ample bearing surface. To realise this they decided to adopt what in their opinion was the best form of radial valve-gear recommended by the engine builders, Messrs James Howden & Co., and which appeared to their superintending engineer to have merits possessed by none other. Therefore they refitted the "Ohio" with modern machinery, and gained thereby an increase of cargo-carrying space due to such a length as sixteen feet.

I think it proper that these facts should be clearly stated in order that the credit of these economies should be fairly distributed.

---

## Mr SMITH'S REMARKS.

The paper we have heard to-night from Mr Williams has been a very instructive one. I have had some little experience of forced draught, although never having sailed with it myself, my knowledge has only been gained from the experience of others, added to what I have witnessed of the results. I have watched the system carefully ever since it came out, and have seen no resulting benefit to compensate for the injury done to the boilers.

I know one steamer which has now been running with natural draught for about five years. The engines are triple-expansion, built by Messrs T. Richardson & Son, and fitted with Wyllie's valve-gear, where the consumption has been as low as 1·2 per indicated horse-power, and

Digitized by Google

sometimes under that when burning *Takasima dust coal.* I mention this as an instance of what can be done with *natural draught* in the way of economy.

On the other hand, I know of steamers sailing in the East with *forced draught*, and having been invited on board of several of them by the engineers in order to see the condition of the boilers and the results of the system, in every case I found some injury done to the portions exposed to the action of the flame, either landings cracked, combustion chambers buckled, or furnace crowns fallen down.

One steamer I may refer to specially was almost disabled for three days in the Indian Ocean on account of the furnaces leaking; after being refitted—the forced draught being taken away—no more trouble was experienced.

---

## Mr COUBRO'S REMARKS.

It appears to me that nearly everything that has been said this evening has been against the system Mr Williams is advocating. I don't mean any particular gear, but forced draught in general, and I should like to hear some one speak on the other side of the question. There surely must be some one here who has seen the advantages of it. I am sorry that my experience has been the same as those who have spoken before me. The only ship I can speak about with any absolute knowledge is one which came up the Thames, and one which I got orders to set to work at once and take out the gear so soon as she arrived at the docks. A great deal of trouble was caused by the fan engine, which was a high-speed engine. The brasses were simply reduced to a molten state, and were working out with the oil. I should like to hear some one who has sailed with the forced draught.

---

## Mr HAWTHORN'S REMARKS.

I have had no personal experience of forced draught, but having listened to the remarks of the previous speakers, several of them, I observe, have thought that the giving out of the boilers has in some

Digitized by Google

measure been due to the great heat created by the draught being forced. As to the cleaning of the fires; does not climatic difference affect the furnaces? There is no doubt that this cleaning of fires does to some extent contribute towards the leakage at joints and the buckling of the plates, but to understand the application of forced draught properly we should look into, I think, the theory of combustion a little more:—to maintain an efficient natural draught, 25 per cent. of the heat generated in the furnace is absorbed in giving that velocity to the products of combustion so that they shall ascend the chimney, and in order that we shall thoroughly decompose the coal in the furnace we find in practice that double the theoretical quantity of air is necessary, and in this air supply, oxygen only is wanted, and not only is there 25 per cent. of the heat lost in bringing about natural draught, but the enormous loss of having to heat up practically 3½ times the weight of oxygen as nitrogen from the temperature of the air of the stokehold to that of the furnace. Again I think that economy in burning coal must be looked for from boilermakers, and until we have a furnace that can conduct the heat better through it, and the sooner that we are free from the deposition of scale on the heating surface, the sooner will the economical burning of coal be apparent in marine boilers. Now, if we can burn our coal more consistently with theoretical reasoning, and bring about perfect combustion with a less air supply than at present, and if Howden's system of forced draught does this for us, then I think it is a step in the right direction.

If my memory serves me rightly it was M. Bidard, an eminent French chemist, that proved for every $\frac{1}{16}$ of an inch of scale that was deposited on the furnace crown it necessitated the temperature of the furnace being raised 15 per cent., and it is no doubt this extreme heat, say an increase of 400° on 2500°, that has had more to do with the joints leaking than anything else. Probably some one ere long will bring out an improved patent on Howden's system as Morton has done for the radial valve-gear, and by that means bring forced draught nearer perfection. I hope we may live to see it.

Mr DIMMOCK—Will Mr Williams please give us the number of pounds of water evaporated per pound of coal as deduced from the trials he has mentioned with forced draught?

Mr WILLIAMS—A record was kept of the number of strokes made by Weir's feed-engine during the trial, the result indicated 13¼

Digitized by Google

pounds per pound of coal, assuming the efficiency of the pump to be 100 per cent. I had no opportunity of testing the actual efficiency, but I believe the maker places the efficiency of these very slow working pumps at not less than 90 per cent.

## Mr DIMMOCK'S REMARKS.

Under ordinary circumstances with a natural draught, one pound of coal will evaporate about 10 pounds of water in marine boilers, while in locomotive type torpedo boilers seven pounds only would be evaporated; and in these last, if forced, it would be reduced to six pounds of water per pound of coal per hour.

Now, with the best fuel (Warlich's patent) there is a sufficient number of units of heat (16,495) in one pound to evaporate nearly 17 pounds of water. This shows engineers very clearly they are not using anything like the full mechanical power of their coal. In going over a considerable amount of data on locomotive boilers, I find as the pressure of the forced draught increases, the evaporative power of the fuel decreases; this I think shows waste. Mr Williams tells us 15 per cent. coal per indicated horse-power was saved by forced draught. I prefer to give this credit to the feed-water heating apparatus which was fitted, because we know of similar economy in fuel being effected by the use of feed-heaters where there was no forced draught whatever.

I am glad this subject is to be further discussed later on in the session; this will enable us to go more thoroughly into the matter, and find out if possible the value, if any, of forced draught, simply of itself in relation to the marine boiler. It seems to me now that it has been experimentally adopted, because it has done good service in locomotive and torpedo boat practice, and without other adequate reason; but we should remember the conditions of use are entirely different—in the one case space and weight are greater considerations than economy of fuel, and with a reduced fire grate it is absolutely necessary to acquire more rapid combustion although wasteful; in the other case fire-grate area has more scope, and economy in fuel is of the greatest consideration; therefore, what applies to the one will not well apply to the other.

One redeeming feature presents itself in the use of forced draught, viz., that the 25 per cent. of the total heat of the furnaces, which under

Digitized by Google

ordinary circumstances goes to create the funnel draught necessary to supply air to the fires, can be used in heating the feed-water, while the supply of air can be effected more economically by a blast fan or other means.

Mr BRUCE—In reply to Mr Coubro', I was on board the "Ohio" about six months ago. She had been at work about two years—July 1887. I saw the boiler furnace end, top plates, and tubes, and I don't think any engineer would want to see a boiler more free from damage. There is no doubt the whole system was in a very good condition, and I was under the impression the superintendent is satisfied with the system fitted in the "New York City."

Mr COUBRO'—I did not say anything about the furnace or boiler having anything the matter with it; all I spoke of was the bearings of the fan engine that went wrong. I think you mean Mr Smith.

Mr SMITH—I quite agree with Mr Williams so far as to say that there may be a saving with *forced draught* in some steamers on account of peculiarity in construction, but to my mind, as far as I can see, it fails to amount to a large enough percentage to compensate for the trouble and expense to boilers and machinery.

I may mention that in the steamer to which I referred in my previous remarks there was nothing done to the boilers during five years' hard running; a caulking tool had never been used on them from the time of leaving the hands of the builders.

Mr COUBRO'—I think seagoing engineers should advise Mr Howden of any little faults they see, so that the system may be made to work as perfectly as possible. They sail with the gear, and obviously have a better chance of finding out its advantages and also its faults.

---

## CHAIRMAN'S CLOSING REMARKS.
### (Mr JAS. ADAMSON).

I have been through the boiler of the "New York City" and examined every corner of it. I found it in an excellent condition after two runs. I examined it again about three or four months ago, and

Digitized by Google

saw the buckled combustion chamber referred to. I think the fault lies in the design of the boiler, and probably the want of an efficient arrangement for cleaning it. The combustion chambers were very difficult to clean. I noted when I saw the boiler at first that doors ought to be fitted in the back of the shells to admit of cleaning the combustion chambers. There was, I observed when I last saw the boiler, a leakage and a few small defects at the Adamson's rings which are fitted in the furnaces. I may say that in the boilers of the "City of Venice," which I have examined, I saw no sign of weakness anywhere. I think Mr Howden is working in the right direction. He will probably add a few improvements, so that, with boilers specially constructed to meet the requirements, and care and attention given to all the details, I do not see why forced draught should not be a success in the future. I think about February or March we may have another paper on this subject. I would impress upon you that Mr Williams is in no way connected with any system of forced draught for marine or land boilers; it is the *principle* of forced draught he desires to bring forward for our consideration, and he gives us the benefit of his experience.

---

## Mr WILLIAM'S REPLY.

Mr Richardson speaks very highly of certain movable firebars, but I cannot appreciate the delicacy he exhibits in witholding their name; I don't think we can know too much of a good thing. So far as my opinion is concerned I will endorse most of what he has said if he means "Henderson's" movable bars, which I think are well suited for natural draught, but for the reasons I have set forth elsewhere are not suitable for any system of forced draught worthy of the name; and as he has not quoted an instance where they have been used with high rates of combustion, I fail to perceive the relevancy of his remarks to the subject under discussion. Instead of saying I had not found boilers in worse condition with forced than with natural draught, I wish to repeat that where Howden's system is fitted and worked intelligently the boilers were in *better* condition than natural draught boilers would be, and I believe time will show that their durability has been extended by the adoption of the system. Mr Richardson's experience of forced draught with the "closed stokehold and other systems" only confirms what I have said about them in my paper.

Digitized by Google

With regard to Mr Sage, I regret that his experience has been so singularly unfortunate. I have had (as Mr Sage stated) the privilege of seeing the condition of the boilers to which he alludes, but I must have misunderstood him, as I can hardly believe that he is ignorant of the cause of the condition in which I found the boilers when I inspected them in Cardiff, or that he is prepared to lead this meeting to understand that he attributes the leaky joints and other defects he has described to us to the system of forced draught fitted on board?

Mr SAGE—Certainly not.

Mr WILLIAMS—Then I understand you to say that you do not think forced draught had anything to do the with boiler defects you have described?

Mr SAGE—No. Not to the forced draught.

Mr WILLIAMS—Then I think that admission disposes of Mr Sage's objections, and I respectfully submit, Mr Chairman, that he has left me nothing to answer with regard to the effects of forced draught.

The suggestion made by Mr Ruthven to multiply the fans I cannot look upon as a very good one, as in several instances which have come under my notice where such a proceeding was tried the effects were disappointing. When two fans deliver air into opposite ends of one pipe the quantity of air passing from a branch in such a pipe would be found to be very little more than it would be with only one of the fans working at the same number of revolutions. When more fans than one are used provision should be made to prevent communication with each other when they are working.

Mr RUTHVEN—You have misunderstood me. I meant one fan delivering into another so as to get a higher pressure with a lower speed.

Mr WILLIAMS—I beg your pardon. The point you have raised is a novel one to me, and I should like to consider it before expressing an opinion as to its merits.

Coming to Mr Bruce's contention that in my statement of space saved in the "Ohio" I have claimed for forced draught a saving which

Digitized by Google

was due in a great measure to the arrangement and character of the engines, which are fitted with Morton's radial valve-gear. But on referring to my table he will find that I distinguished the saving of space effected in boiler rooms from the general saving, and the 16 per cent. increased power I have given as obtained from these boilers neutralises the claim as to the space saved by boilers supplying steam to triple engines, as the difference in the weight of steam used in compound and triple engines comes to about the same percentage. He also thinks I have underestimated the power of the old engines. If this be the case I have committed a far greater error in the same direction with regard to the new ones, as the difference observable in the ship's speed before and after refitting accounts for at least 25 per cent. increased power. The power I have allowed for the fan engine was deduced from actual experiments, which I carried out to find the power required to drive the fan at different velocities. In the case under consideration it ranges from 6· indicated horse-power with good Welsh coal to 27½ indicated horse-power with American slack coal. I took diagrams from the fan engine at various speeds between these limits, and plotted the results on squared paper, which enabled me to estimate very nearly the indicated horse-power required to drive the fan at any velocity, and air pressure between those actually noted at the time.

Mr Smith has told us a woeful story of cracked tube plates which have come under his notice in ships fitted with forced draught, and he says one of the ships (out in Japan) had Howden's system on board; but I must attribute the defects he has observed to other causes than the forced draught, as it is quite impossible to crack the tube plates of a boiler properly fitted on Howden's system, except under circumstances where they would crack much quicker with natural draught.

With regard to the statement that he has observed triple engines indicating a horse-power on 1·2 lbs. of coal with natural draught, I hope I have shown that if such was the case the consumption would be less than 1 lb. if a properly designed system of forced draught was fitted to the boiler which produced the results he has given us.

Mr Coubro's testimony rather illustrates my remarks about placing fan engines in the stokehold than it bears directly on the question of forced draught. I don't think Mr Howden should receive all the blame for having indulged in this practice.

Digitized by Google

Mr COUBRO'—I was alluding to another system, not Howden's.

Mr WILLIAMS—I thought all along you were alluding to his system, and as you laid special stress on the wear of the fan engine brasses, I reserved some remarks about fan engines which would apply to what Mr Sage has said about the breakdowns he has had with them also. However, the remarks I am going to make apply to any system, and if the fan engine gives trouble owing to its position on board the ship, I don't think superintendent engineers should throw all the blame on those who placed it there. If the latter were not seagoing men, they were unable properly to realize the disadvantages under which machinery placed in the stokehold must work when the ordinary work of the stokehold is being carried on at the same time. A superintendent who does not exhaust all the means in his power to dissuade his owners from allowing the fan and engine to be placed in the stokehold is more to blame than those who put it there, from the fact of the engine builder not having had the same opportunities of observation. Speaking personally, as one who has suffered under the infliction, I cannot use words too strong to express the utter abomination with which I have always regarded the perpetration of such a mechanical atrocity as the placing of high-speed machinery in stokeholds.

Mr Hawthorn states that 600° is the usual funnel temperature with natural draught, but I have not put it at 700° without reasons for doing so. Long before I had the privilege of using accurate thermometers I used to try the funnel temperatures by introducing pieces of lead and zinc into the base of the funnel as near the centre of it as possible, and I have never been able to carry a piece of zinc without melting as far as Gibraltar at full speed with natural draught; consequently I look upon the 700° given in my paper as a somewhat low estimate, and this receives confirmation from the "Meteor's" trial with natural draught where the temperature of the funnel averaged nearly 800° during the short run from Leith to London. A comparison of the "Meteor's" trial with those carried out on board the "Ohio" will enable us to estimate the value of a properly designed system of forced draught, as the boilers and engines of these steamers are not widely different from each other; the superior results obtained in the "Ohio" cannot be ascribed to excess of heating surface, as the "Meteor" had 40 per cent. more per indicated horse-power than the "Ohio" in the trial I have described at length in my paper. There are many other points of comparison in the two trials which tell strongly in favour of forced draught as applied in the "Ohio."

Digitized by Google

I was gratified to hear such an authority as Mr M'Farlane Gray attach so much importance to the philanthropic aspect of the question to which I alluded in my paper as the "human factor," an element which ought to be considered. He has also dealt very fully with the contention of those who seek to condense the air in the furnaces by partially closing the funnel damper, but even the small amount of compression he has mentioned, viz., that represented by one inch of water pressure, is very much more than can be practically attained, as the pressure under the damper must not exceed that of the atmosphere in the stokehold, otherwise the flames will come out of the fire-door. I have tried the plan and come to the conclusion that nothing is gained by closing the funnel damper; and after reducing the temperature of the products of combustion as much as possible, we should try to facilitate rather than impede their escape. It would be a mistake to assume that the use of heated air necessarily involves a higher stokehold temperature unless the air is heated beyond the temperature of the boiler. On the contrary the air casing tends to keep the stokehold cool by intercepting and utilising a large proportion of the radiant heat from the front of the boiler shell. If the air casing is carelessly fitted and hot air allowed to pass into the stokehold instead of the furnaces (which I have known it do in ships fitted out of Glasgow), the firemen will find it out and the system gets the blame instead of those who have misapplied it.

The difficulty anticipated by Mr Shorey of cleaning the tubes fitted with spiral retarders is successfully met by using a steam jet with a split nozzle, which passes each side of the steel strip in the tube, and cleans them as easily and quickly as if no retarders were there. I have called these spirals "retarders," as this is the name they are generally known by; but after what Mr M'F. Gray has said, I think perhaps "integrators" would be a more appropriate name for them, as they undoubtedly serve in some measure to integrate the variations in the temperature of the escaping gases, and this probably accounts for the remarkable uniformity observable in the funnel temperature where they are fitted. Contrary to general expectation, they do not tend to choke the tubes with soot, but with high rates of combustion they act most effectively as tube cleaners, owing to the rotative direction given to the gases, thus preventing the deposit taking place until it comes to the smoke-box, whence it requires to be frequently cleaned out. I have seen the "Ohio" after a run across the Atlantic come into Liverpool with tubes almost as clean as they were leaving port. I am aware that the

Digitized by Google

benefits arising from the use of these appliances have not been sufficiently appreciated in some quarters, and that the engineer of a certain mail steamer, who I believe poses as an "improver" or "modifier" of Howden's system, had them taken out (as Mr Sage has done, and now complains of a system he is not working properly) because in the 'thwart ship boilers under his charge they worked back into the combustion chamber with the rolling of the ship! About the same time another engineer who experienced the same difficulty—and here I may say we have an illustration of the readiness and resource shown by different engineers under similar circumstances—he did not condemn the retarders, but got over the trouble by giving them a slight bend before putting them into the tube, and he found the friction induced by this simple means sufficient to retain them in position with the heaviest rolling of the ship. I may also mention that Mr James Laing, of the City Line of steamers, caused tests to be made of the coal consumption on different voyages with and without these retarders or "integrators," and the result completely satisfied him of their economical utility.

One speaker has stated that I claim 12 per cent. by the use of forced draught, but I hope I have shewn it is easy to account for 15 per cent. saving. In the majority of cases this gain has been exceeded, and I can only attribute this excess to the use of heated air. It is true that I cannot conclusively show just now (with figures) how this additional gain is brought about, but a parallel is furnished by the triple-expansion engine. The economic facts in that case were proved before the great importance of restricting the temperature in the cylinders was fully recognised, and in the case of heated air and forced draught I have little doubt that the professors will be found equal to the occasion, and after the facts have been generally established by us, they will find figures to account for the facts.

Mr Sage cannot recommend Howden's system for use in "tramp" ships, but I will compare his experience with that of another superintendent over ships of the same class as he has to do with. Two ships, the "Strathblane" and "Strathendrick," have engines by Howden & Co. precisely similar to those spoken of by Mr Sage (I can speak with some authority on this point, as the four sets of engines were erected under my direct supervision from the same drawings). The "Strathblane" was fitted with forced draught exactly similar to Mr Sage's ships; the

Digitized by Google

"Strathendrick" with larger boilers and natural draught; both ships are now at work, but the "Strathblane" burns 19 per cent. less coal at same speed than the natural draught ship, consequently the superintendent engineer and owners have arrived at an exactly opposite conclusion to Mr Sage, and have arranged to get their next ship fitted by Mr Howden with forced draught. The Clan Line, after altering six of their steamers, are negotiating for no less than 13 others of their fleet to be fitted with forced draught on the same system.

Digitized by Google

# ADDENDA.

## *Written by Mr Williams after the discussion, and published in "Fairplay" Dec. 13th.*

In reviewing the contemporary development of marine engineering, we find the principle embodied in the term "forced draught" receiving from practical engineers the attention which scientists have long pointed out as its due. Most of the attempts hitherto made to induce economy by forced draught have been failures; in some cases due to ignorance of the scientific principles involved, in others due to ignorance of the practical conditions under which these principles must be applied in actual work. Some of the inventors whose efforts have been marked by failure, are now among the most strenuous opponents of any further trial of the system, and seem disposed to regard any degree of success attending the efforts of others as an insult to their own intelligence. As the subject is one of considerable interest to shipowners, I propose to briefly review the question from a purely theoretical standpoint. The loss sustained in producing the draught in marine boilers worked with natural draught at usual rates of combustion, is considered by the most reliable authorities to be not less than one-fourth of the available heat of the fuel when of good quality, and more than this when it is of an inferior description (see "Meteor's" recent trial). We shall not be far wrong if we assume 650° Fah. above that of the external air as representative of the funnel temperature in sea-going ships at full power with moderately dirty boiler tubes. The specific heat of air at $c\,p = 0{\cdot}238$, therefore every pound of it raised 650° and discharged into the funnel carries away $650 \times 0{\cdot}238 = 174{\cdot}7$ B T units of heat, and 24 lbs. (the usual allowance of air per lb. of coal with natural draught) will contain 4192·8 units. Crediting the volatilised carbon and other constituents of the fuel which pass up the chimney in combination with the oxygen obtained from the air with the same "specific heat," we have $4192{\cdot}8 + 174{\cdot}7 = 4367{\cdot}5$ heat units passing away—per lb. of fuel—for

Digitized by Google

which we receive no equivalent in the form of useful work. This loss may be minimised (and generally was so during the recent depression in the shipping trade) by reducing the rate of combustion, and consequently the power obtainable from the boilers. The possible amount of saving by this method of slow combustion was greater when low pressures were carried than can be the case with higher boiler pressures. The reason for this is not far to seek. With safety valves loaded to 160 lbs. the boiler pressure should average about 158 lbs., equivalent to a boiler temperature of 370° Fah. The heating surface of the boiler at this temperature represents the cooling surface exposed to the products of combustion. If we take Professor Dwelshauver Dery's estimate of 164° Fah. as the lowest temperature at which active transmission of heat from the products of combustion to the water in the boiler takes place, we have 370° + 160° = 534° Fah. as the lowest temperature at which the escaping gases can leave the boiler with the utmost extension of heating surface, or slowest rate of combustion within reasonable or payable limits. Taking the initial temperature of the external air at 60°, the loss per lb. of air supplied to the fires would be reduced to (534-60) 0·238 = 112·8 heat units, which represents a saving of about 9 per cent. in the coal per unit of power developed at the reduced speed with slower combustion. Now, unless we utilise the heat in the waste gases, no further reduction in the funnel temperature can take place with any system of forced draught, and the only further gain to be looked for will be due to the smaller supply of air per lb. of coal when the draught is mechanically produced; a gain which is generally, though not necessarily, neutralised by the heat units expended to work the fan engine. By utilising the heat passing away in the last example to heat the incoming air, and allowing a similar range of temperature between the air in the heating chamber and the gases surrounding it, as we have between the gas and the boiler water, we see the possibility of reducing the funnel temperature to 164° Fah. above that of the atmosphere; or, in the present case, to 164 + 60 = 224°, equivalent to a loss of only 39 B T units per lb. of air supplied to the fires. Taking the available heat of the fuel at 15,000 H units, we have a loss of 6¼ per cent., as against 29 per cent. with the same supply of air as in the first example, showing a clear gain of over 22 per cent. That the possibility of this saving is not over-estimated has been proved by the close approximations to it in several ships where the arrangements both for driving the fan and heating the air are still susceptible of further improvement.

Digitized by Google

UNIV. OF MICH.

Digitized by Google

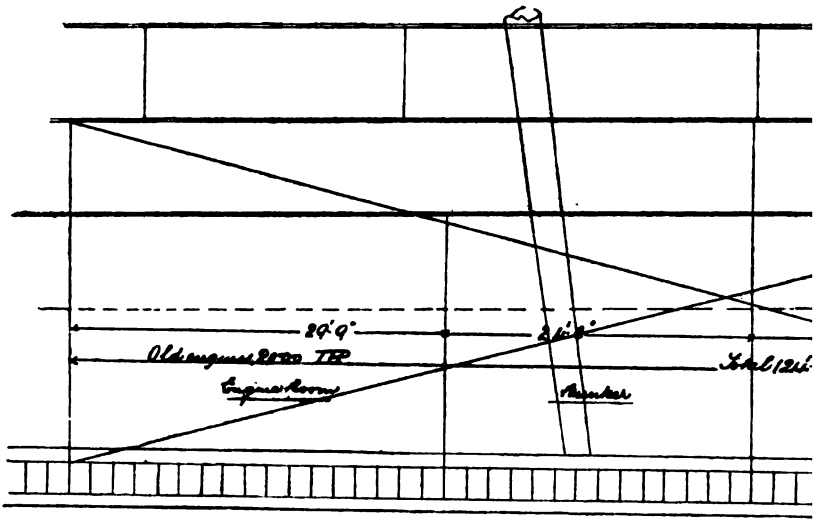


Present Arrangement S.S. La

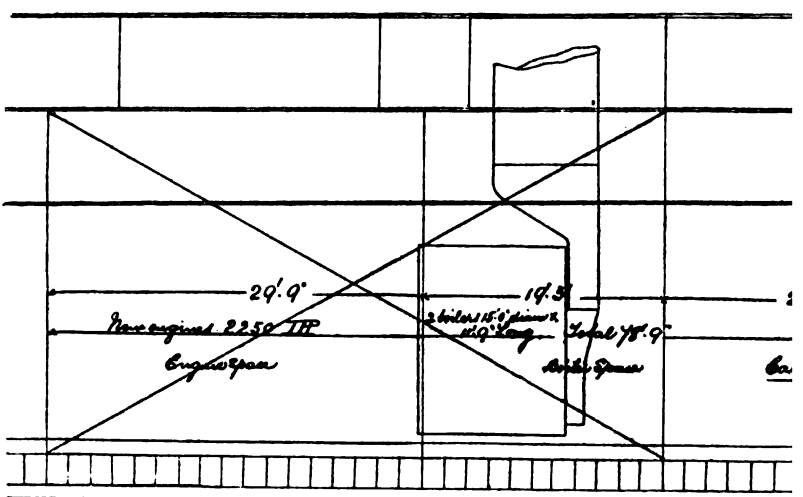


New Arrange

Digitized by Google

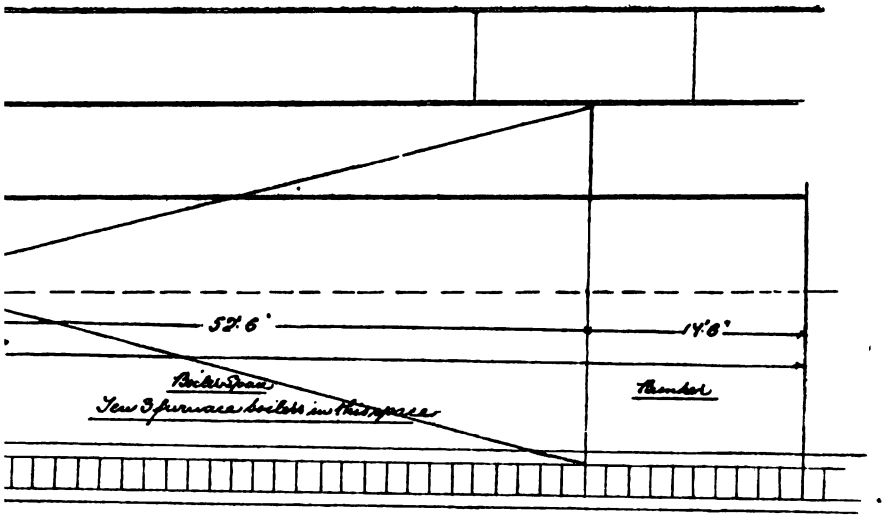


nation"

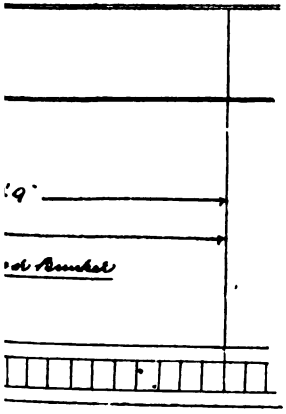


This steamer will run as far with the coals contained in her bunkers in the engine and boiler spaces with new machinery as she could do with the bunkers and machinery before alterations.

The forward cross bunker in new arrangement is to enable her to run to River Plate and back with coals carried from this country.

mt s.s. "Sarmatian."

Digitized by Google

Digitized by Google

Digitized by Google

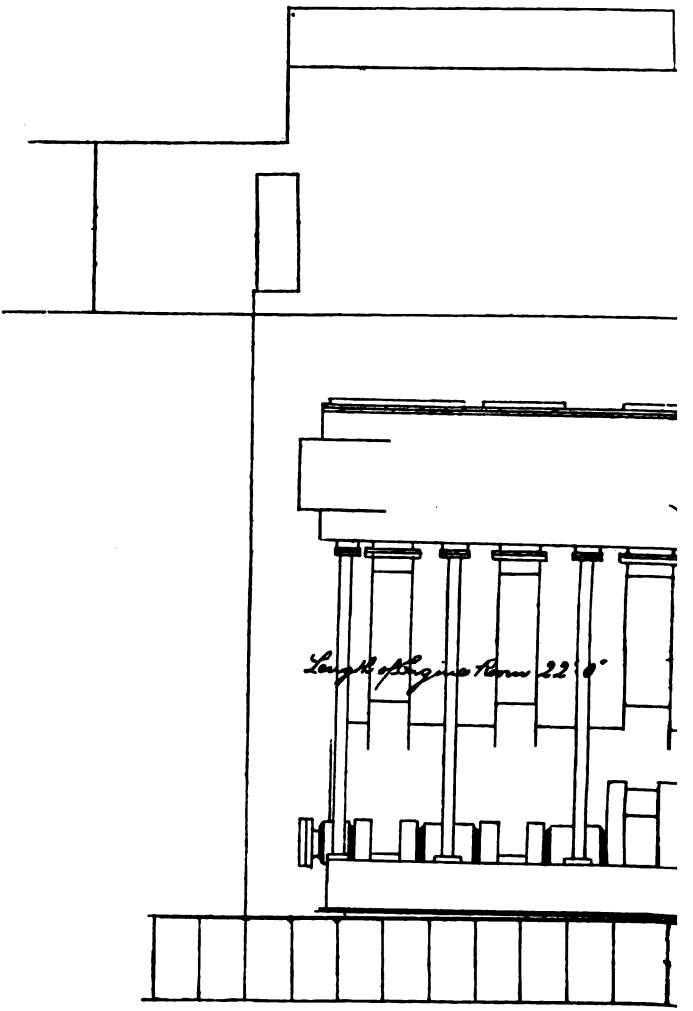


Arrangement of
Scale ½ i
To Indicate 170

Digitized by Google

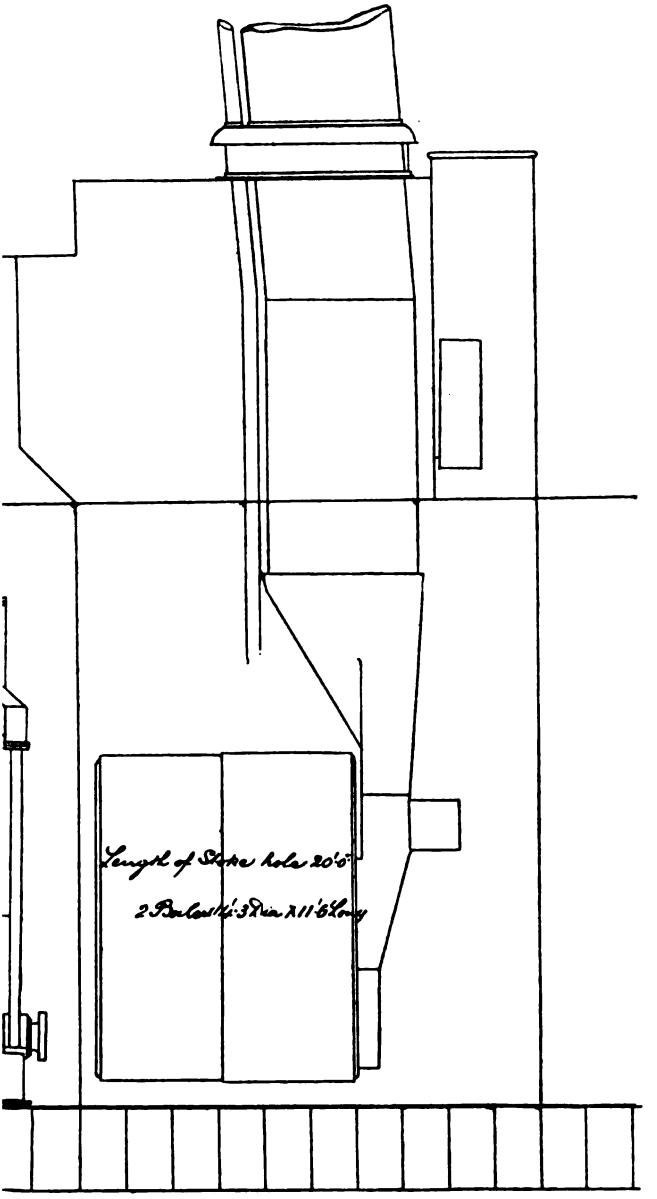


ew City Liner.
.=1 ft.
Horse-Power.

Digitized by Google

Digitized by Google

Digitized by Google

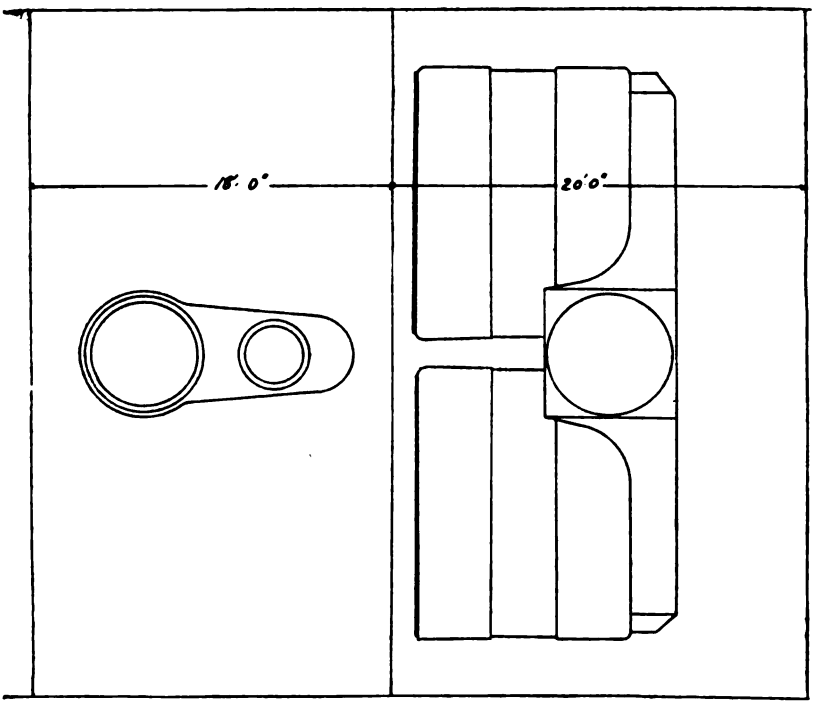


Arrangement of s.s. "Clan Gordon"
Before Alterations.
Scale ¼ in. = 1 ft.

NOTE—6 "Clan Liner

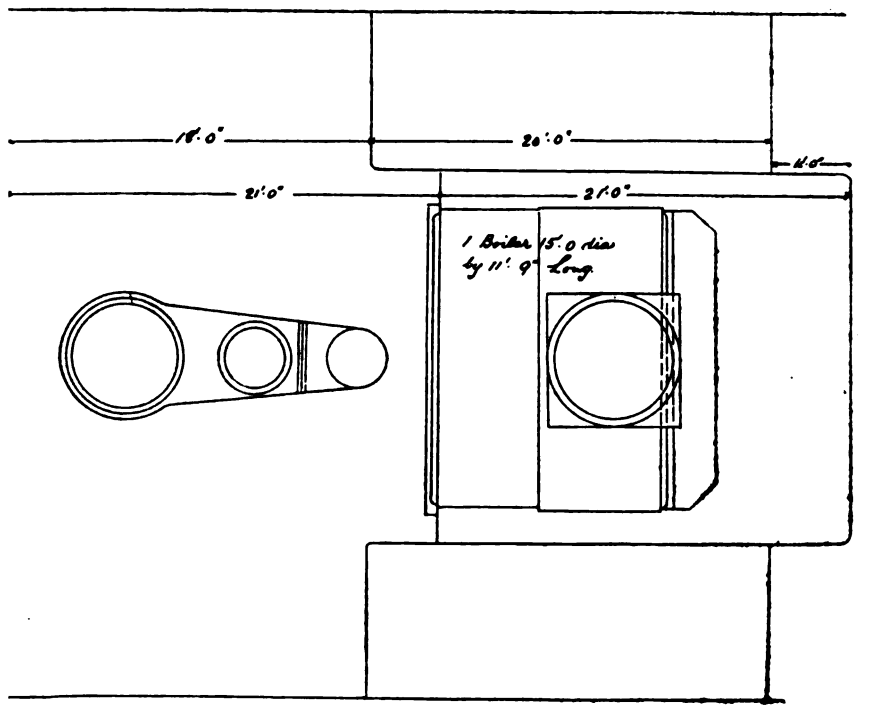


" altered like this.

Arrangement of s.s. "Clan Gordon"
After Alterations.
Scale ¼ in. = 1 ft.

Digitized by Google

Digitized by Google

Digitized by Google

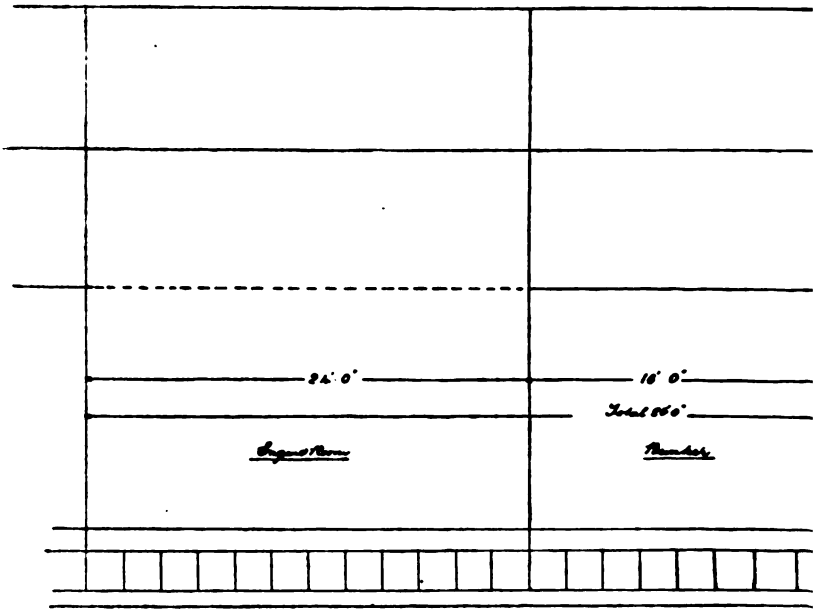


Arrangement of SS

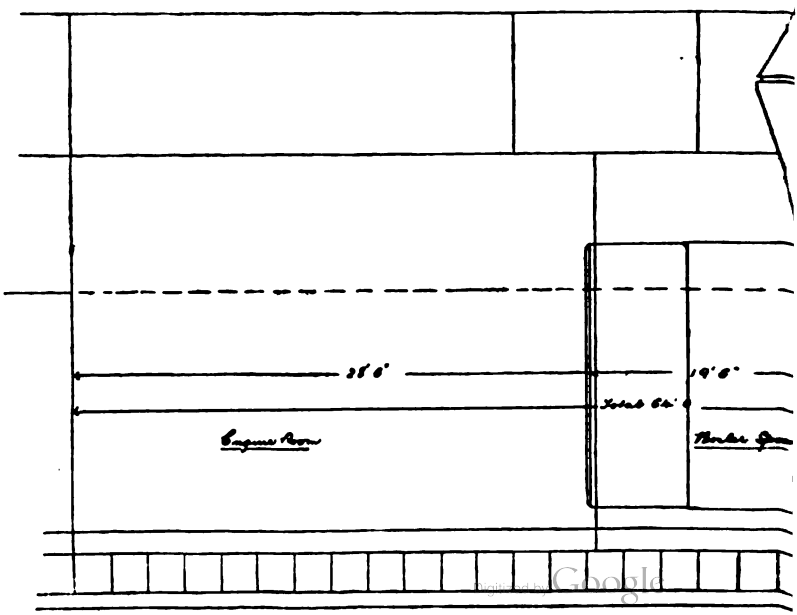


Present Arrangement

Digitized by Google

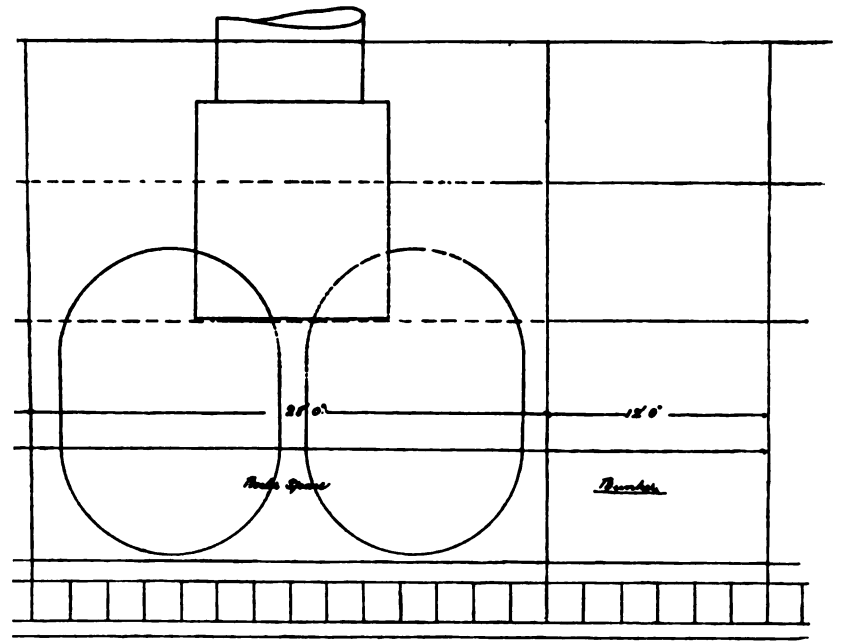


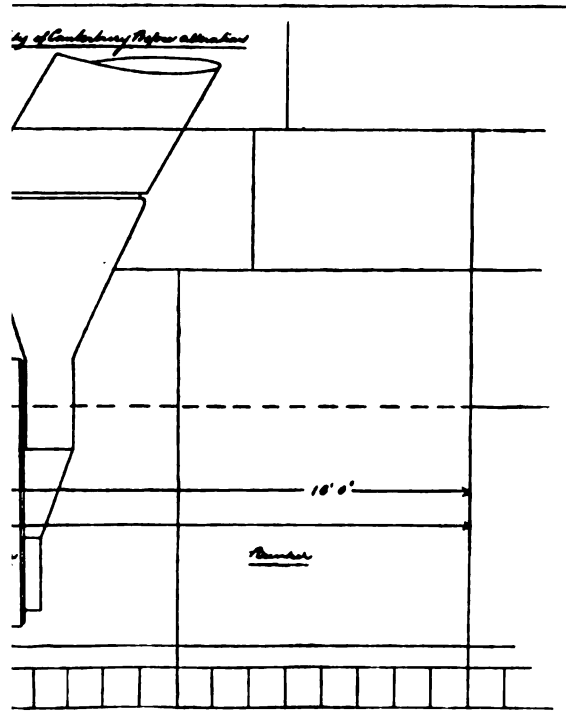


.R. "City of Canterbury."

Digitized by Google

Digitized by Google

Digitized by Google

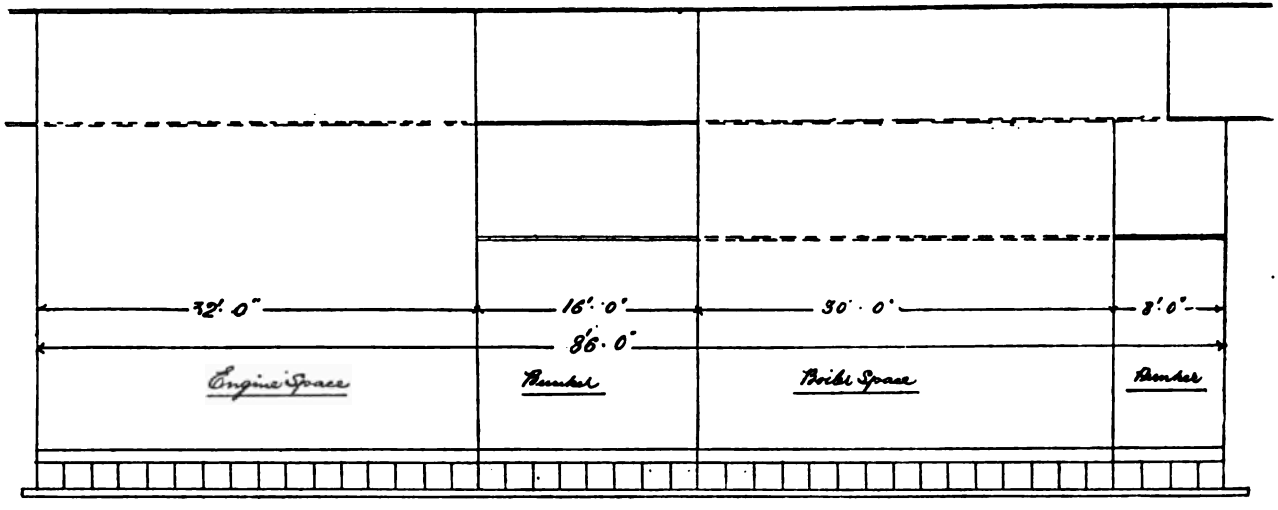


Present Arrangement of S.S. "Illinois" S.S. "Indiana"

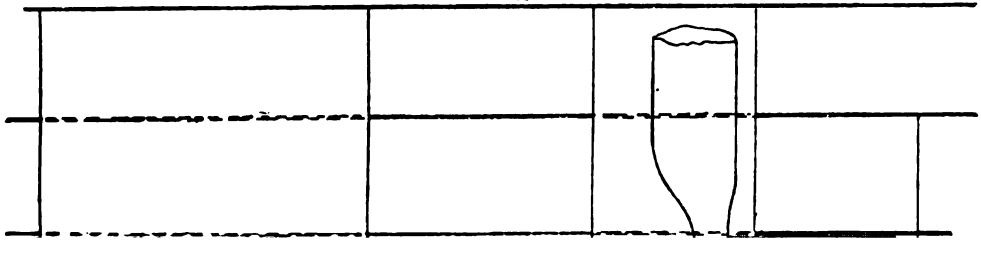

Digitized by Google

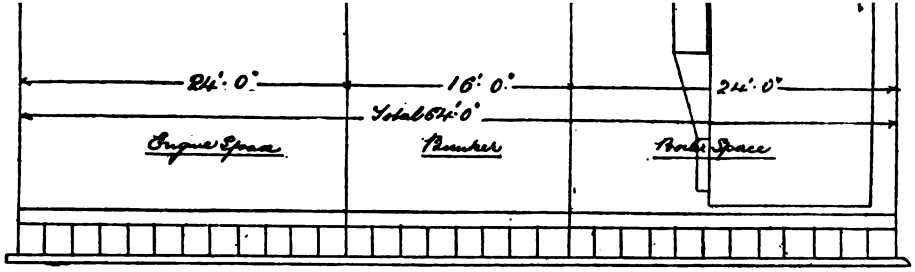


Proposed New Arrangement. S S "Illinois"

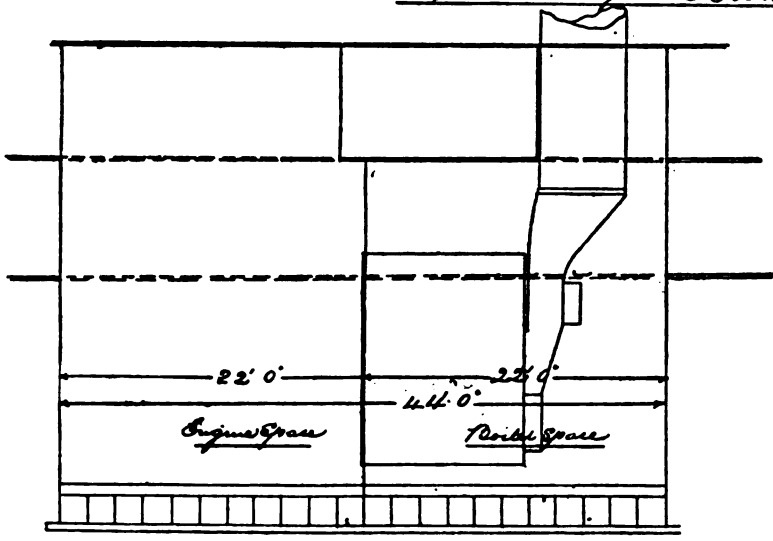


Proposed New Arrangement s.s. "Indiana."

Digitized by Google

UNIV. OF MICH.

Digitized by Google

# INSTITUTE OF MARINE ENGINEERS.

**SESSION, 1889-90.**

---

# EIGHTH PAPER

(OF TRANSACTIONS),

BY

## MR. A. BELDAM

(PRESIDENT)

ON THE

# PROGRESS AND DEVELOPMENT

OF THE

# *MARINE ENGINE.*

---

**Read November 1st.**

---

PRICE SIXPENCE.

---

STRATFORD:

Printed by Wilson and Whitworth, Broadway.

Published at the Langthorne Rooms, 15, Broadway, Stratford, Essex.

Google

Digitized by Google

# PREFACE.

THE LANGTHORNE ROOMS,

BROADWAY, STRATFORD, E.,

*Friday, November 1st*, 1889.

The First General Meeting of the Institute of Marine Engineers was held here this evening in accordance with the Regulations. The Meeting was presided over by MR. A. BELDAM, first President of the Institute. The following statement was read by the writer:—

It is with a considerable degree of pleasure that I ask you to look back with me over the past nine months, and trace the footsteps of the Institute of Marine Engineers from the early tottering of childhood to the firm tread of youth. I would also ask you to allow your minds to soar beyond the limits prescribed by time present, gaze fearlessly into the future and behold the Institute in the full force and power of its perennial manhood.

In February of the current year, we may say, the Institute was founded, when the first public meeting was called in order to test the feeling of Engineers on the subject.

The Reading Room was opened about the same time and the table supplied by voluntary contributions.

The Loan Collection—**Malcolm Campbell Memorial**—was then added as a library of useful and pleasant books for the use of Members and has been added to month by month, until now the necessity has arisen for an additional case to contain the volumes.

The collection of objects of interest and specimens is also gradually increasing and many samples and specimens are being held back for want of accommodation.

Digitized by Google

The seven papers which have been read are now matters of history and the comments of the Press are such that I need not further refer to them, except to express the hope that the papers in preparation may sustain the character earned by their predecessors. I am pleased to note that the attendance at the Reading of papers has been steadily increasing.

The Recreation Committee are now at work arranging for a Social Meeting or Conversazione, to be held in the Town Hall, Stratford, on the 6th December, for members and their personal friends.

The Registration of the Institute was completed in July, when Mr. Neely received the Charter from the Board of Trade and forwarded the same to us.

The names of the Council and Office Bearers are printed in the copies of By-Laws and Articles of Association, which may be inspected by Members in the Reading Room, and in view of the Election to take place at the Annual Meeting in March, members should examine the list with a view to the election of the new Council. Voting Lists and Notices will be posted in due course in terms of the articles in the By-Laws.

The Membership to this date is as under:—

| | |
|---|---|
| Members .. .. .. | 160 |
| Honorary Members .. .. | 8 |
| Associate Members .. .. | 9 |
| Associates .. .. .. | 9 |
| Graduates .. .. .. | 4 |
| Total .. | 190 |

With the addition of several applications which yet remain to be considered, the total will reach 200.

| | £ | s. | d. |
|---|---|---|---|
| The Receipts up to this date amount to | 321 | 5 | 0 |
| The Expenditure .. .. .. | 201 | 17 | 4 |
| | £119 | 7 | 8 |

In connection with this cash statement it may be remarked that there are several Annual Subscriptions due from members who have up to this date only paid their entrance fees, and I may take this opportunity of asking members to bear this in mind.

Digitized by Google

Mr. NEELY, 25, Old Jewry, who acted as our solicitor in the matter, has our warmest thanks for the manner in which he conducted the negociations and for the personal interest and trouble he took, and in addition for his proferred and courteous offer to act as Honorary Legal Adviser to the INSTITUTE.

It rests with the members, after what has been done by the present Council and Office Bearers, to express their views as to the style in which the business has been conducted, and if they are satisfied that the honour and dignity of the Institute is safe in their hands till the Annual Meeting, to move a vote of confidence accordingly. The Annual Meeting takes place in March, this is merely a formal business meeting, called in accordance with the requirements of law, to give members an opportunity of expressing their satisfaction or otherwise with the Office Bearers and what they have done.

It is highly gratifying to observe that so many of the leading journals and scientific papers are desirous of reporting our proceedings, and have expressed opinions favourable to the INSTITUTE, we would thank the various editors and proprietors for their courtesy and kindly interest, as well as for their good wishes.

It is not many months since—at our third or fourth Council Meeting—when the question arose regarding notices from the Press, I remarked that the time would come when, in place of our seeking to obtain notice from the Press, the Press would seek to obtain notices from us. My remark was prophetic, the time I predicted has come, and the spirit of independence, which animated me to make the remark, has been justified by the event.

It is more in keeping with our life work as engineers to prove what we are, and demand success by results achieved, than to seek by adventitious means to gain that to which we have not proved our title.

In closing I would seek to act the prophet again. We, I speak as the mouthpiece of the present Council, have established the Institute on a good, sound basis; some of us have not spared ourselves in seeking to command that success should crown our efforts, and it remains with every member of every grade to do his utmost to advance the highest interests of the Institute, doing so, I venture to predict a great future for it and through it, the whole trade to which we esteem it an honour to belong.

The CHAIRMAN then commented upon the work which had been done since the 12th February, when the inaugural meeting was held, and asked for an expression of opinion from members present as to the progress which had been made.

Digitized by Google

Mr. S. C. Sage proposed, and Mr. J. W. Dimmock seconded the motion, that a cordial vote of confidence in the present executive of the Institute should be passed.—This, on being put to the meeting, was carried unanimously.

Mr. Leslie (convener), reported that a committee of ladies is working along with the Recreation Committee in arranging for a conversazione, to be held in the Town Hall, Stratford, on the 6th December. The programme is well in hand and the meeting promises to be a most pleasant one.

The business meeting closed with a vote of thanks to the President.

On the same evening Mr. A. Beldam read a paper on "The Progress and Development of the Marine Engine," which will be found in the following pages, also the remarks made in the course of the discussion, and a lithograph of the Engines referred to by Mr. Wymer. The Chair was occupied by Mr. J. McFarlane Gray.

Digitized by Google

# THE

# PROGRESS & DEVELOPMENT

OF THE

# MARINE ENGINE.

In October, 1788 (now 101 years ago), there appeared (it is said) in various Scotch newspapers, an account of an experiment which was said to be 'no less curious than new.' It was stated that, on the 14th inst., a boat was put in motion by a steam engine, at Dalswinton, by MR. MILLER, on a piece of water at that place. It was also said "that that gentleman for some time past had studied the application of the 'steam engine' to the purposes of navigation." He accomplished and eventually shewed to the world the practicability of this by executing it on a small scale.

A vessel 25ft. long and 7ft. broad was, on the above date, driven with two wheels by a small engine.

It is said, moreover, that it answered MR. MILLER'S expectations and afforded great pleasure to the spectators present. The engine used was MR. SYMINGTON'S, and was patented by him.

It was also stated that "a more complete and beautiful experiment was never made by *any* man, at *any* time, either in art or science." The vessel moved delightfully, and, notwithstanding the smallness of the cylinders (4in. in diameter), went at the rate of five miles an hour.

It continued to ply for some days for the amusement of the projector, and to the astonishment of the country people, who assembled from all quarters to witness the wonders of a "boat driven by reek." Fifty years later (that is in 1838) the "Sirius" and the "Great Western" crossed the Atlantic, both arriving at New York on the same day, April 23rd, the "Sirius" in the morning and the "Great Western" in the afternoon.

Digitized by Google

The credit for the design of the engine and boat used at Dalswinton, seems to be conjointly due to PATRICK MILLER, JAMES TAYLOR, and WILLIAM SYMINGTON.

JOHN SCOTT RUSSELL has remarked "The creation of the steamship appears to have been an achievement too gigantic for any single man. It was produced by one of those happy combinations in which individuals are but tools; each working out his own part in a great system, the whole of which no single one may have comprehended all the workings."

MR. SCOTT RUSSELL came to the conclusion that the art of steam navigation was the joint invention of the three men I have already named, and that to their efforts the world owes its present advantages. The second steamboat was constructed at Carron, in 1789, by the same three men; it was 60ft. in length, and was fitted with engines having cylinders 18in. in diameter. It is said a speed of nearly seven miles an hour was obtained.

The first really practical steamboat (the "Charlotte Dundas") was designed by SYMINGTON, in 1801, and tried on the Forth and Clyde Canal early in 1802. It was propelled by an engine designed and patented by SYMINGTON. It was a horizontal direct-acting engine, and appears to have been the first ever made, the piston and connecting rods of which were coupled direct to the crank arm, the lever being dispensed with. It is said this vessel was able to tow two vessels (each of 70 tons burthen) a distance of 20 miles (against a strong head-wind) in six hours. The proprietors of the canal, fearing injury to its banks, declined to adopt the new system of towing; and hence we hear nothing further (to my knowledge) having been done by SYMINGTON.

We have now to cross the Atlantic for the next development of the Marine Engine. JOHN FITCH, an ingenious Connecticut mechanic, for many years experimented with different designs of engines, and from 1787 till the time of his death, in 1798, built several steam-boats, but in all his attempts he was unfortunate.

Various other workers were busy in America about the same time or shortly after. Most prominent amongst them was ROBERT FULTON, who (although American by birth, was Irish by parentage) at the early age of twenty-one, by his own exertions, had acquired considerable skill in mechanics and as an artist. Coming to England in 1786, he spent some time in mechanical pursuits, and arriving (as he did) just before the trials of the Dalswinton and Carron boats, his attention was naturally directed to them, and about which he collected a considerable amount of information.

Digitized by Google

After spending some years in England, he migrated to Paris, where many projects occupied his time, such as sub-marine warfare, locomotion, and explosions.

In 1801 he directed the attention of Livingstone (the American Minister at the Court of France, who had himself made many experiments on the subject) to the importance of steam-power in navigating the lakes and rivers of their own country, and the two agreed to co-operate.

FULTON went to work in a thorough manner, and made experiments on the resistance of models of different kinds at various speeds, and guided by these results, completed a steamboat, which was tried on the river Seine, in 1803, but the vessel being too weak for the heavy machinery, broke in two and sank to the bottom of the river. The machinery, however, was little injured, and the hull being re-constructed, a trial was made later in the same year, and a speed of 4½ miles an hour attained.

Disappointed in obtaining pecuniary aid from the French Government, he crossed to England in 1804, and ordered an Engine from BOULTON & WATT, of 2 feet diameter of cylinder, and 4 feet stroke, which in design was a modification of the ordinary type of Engine made by that firm.

FULTON and LIVINGSTONE, on their return to America, constructed a vessel called the "Clermont" (which was launched early in 1807) and employed the WATT engine to propel it. This vessel was larger than any other hitherto constructed; being 133 feet long, 18 feet broad, and 9 feet deep. This vessel on its trial ran a distance of 150 miles in thirty-two hours, and returned in 30 hours. This, no doubt, was the first voyage of considerable length ever made by a steam vessel.

After the success of the "Clermont" FULTON built a number of other vessels; and in 1812 he designed the first steam vessel of war, which was launched in October, 1814. The "Fulton the First" (as the vessel was called), was considered of enormous dimensions at that time. The hull was double; her dimensions 156 feet long, 56 feet broad, and 20 feet deep, and measuring 2,475 tons. On her trial-trip she steamed 58 miles in 8 hours and 20 minutes; and when her armament and stores were on board, made 5½ miles an hour.

FULTON's name deserves to be honoured, for having done so much in advancing marine engineering, and making steam navigation a commercial success.

Digitized by Google

Among other Americans who did much to promote marine engineering in its early days, I must mention JOHN STEVENS, of Hoboken (who not only much improved the designs of engines, boilers, and propellers; but also the form of vessel) and his son ROBERT L. STEVENS, afterwards known as the designer of STEVENS' battery.

HENRY BELL, of Helensburgh on the Clyde, having occupied his mind on the work of FULTON and LIVINGSTONE in America, now turned to useful account his experience of MILLER, TAYLOR, and SYMINGTON, and had the good fortune to associate himself with an able shipbuilder and ingenious engineer. In 1812 he contracted with JOHN WOOD, of Port Glasgow, to build the hull, and with JOHN ROBERTSON, of Glasgow, to make the engines of the "Comet." This vessel was 42 feet long, 11 feet broad, and 5 feet 6 inches deep. The engine had a cylinder 11 inches in diameter with a stroke of 16 inches. At first she was fitted with two pairs of paddles driven by spur-gearing; but this arrangement proving unsatisfactory, she was lengthened to 60 feet, and fitted with a single engine, which drove a single pair of paddles. The speed attained appears to have been about six miles an hour. MR. BELL had associated with him in his experiments, JOHN THOMPSON, a Glasgow engineer, who (feeling himself aggrieved) got MR. JOHN WOOD to build a vessel 51 feet long, 12 feet beam, and 5 feet deep, which was named the "Elizabeth" and made an average speed of 9 miles an hour, and thus was able to eclipse Bell's "Comet." The "Elizabeth" was, therefore, the first remunerative steam vessel in Britain.

Among the early shipbuilders, are the names of WOOD, STEEL, SCOTT, DENNY, and CAIRD, and engineers, those of DAVID and ROBERT NAPIER (of the Clyde) stand pre-eminent. MR. SCOTT RUSSELL was of opinion that from the year 1818 till about the year 1830, DAVID NAPIER effected more improvements in steam navigation than any *other* man.

The "ROBERT BRUCE" of 150 tons, built by MESSRS. WOOD, the "Superb," of 240 tons; and the "Eclipse," of 140 tons, were all engined by DAVID NAPIER, and their good construction did much to establish steam-navigation, and render it an object of national importance. These vessels were built from 1818 to 1820. The construction of the "JAMES WATT" in 1822 was a decided step in advance. She measured 448 tons, and was built by the MESSRS. WOOD. In form, strength of construction, and speed, she was much before every vessel of her day, having a speed of 10 miles an

Digitized by Google

hour. Her two engines of 50 horse-power were by BOULTON and WATT, and were geared between the crank and paddle shafts. From the time of the construction of the "JAMES WATT" a gradual increase in the size, and improvement in the design of the ships and engines took place; until (what was called at the time) the "Leviathan class." An American vessel, the "Savannah," partly sailing and partly steaming, crossed over to Britain in 1819, and in 1833 the "Royal William" crossed from Quebec; but it was in the year 1838 that Transatlantic navigation was established on such a basis as to prove that it would be commercially successful. The voyages of the "Sirius" and the "Great Western" had already proved this. The "Sirius" was built in 1837 by MESSRS. MENZIES, of Leith, and the engines (which were of the side-lever type) were constructed by WINGATE & Co., Glasgow, her tonnage being about 700 tons, and her horse power 250. The "Great Western" was the first steam ship specially constructed for the Atlantic trade. She was built at Bristol by MR. PATERSON, her dimensions being 212ft. long, 35ft. 4in. broad, and 23ft. 2in. deep, and registering 1,340 tons, builder's measurement. Her engines (which were side-lever, and 440 horse-power) were constructed by MAUDSLEY, SONS, AND FIELD, of London, having cylinders 73½in. diameter, and 7ft. stroke, making 12 to 15 revolutions per minute. The "Sirius" and the "Great Western" arrived in New York on the same day, April 23rd, 1838, the latter having performed the voyage in four days less than the former.

For the next 20 years the side-lever engine was employed almost entirely in the large mail packet companies, and was essentially WATTS' engine, modified in certain details. The Americans used (and still use) the ordinary "beam engine" for paddle steamers, but in Britain, in order to economize space, and bring the weights low down in the vessel, they were inverted, and thus became what were called "side-lever engines." Some of these engines were of magnificent design; but they were by no means self-contained, the kelsons and framing of the vessels being largely relied upon for resisting the stress arising from the action of the engines; and this being the case, a low pressure of steam and uniformity of motion were matters essential to their safe working. The pressure of steam was generally from 3lb. to 5lb., and seldom exceeded 10lbs. on the square inch above the atmosphere, whilst the space occupied by machinery was enormous. I believe that the consumption of coal at this period was about 7lb. per indicated horse-power per hour.

Digitized by Google

The steeple-engine designed by DAVID NAPIER soon became the favourite engine for driving paddle steamers, and continued to be used for many years, especially in river steamers, and also the direct-acting-diagonal or oscillating engine (a well-known type) designed, I believe, by JOSEPH MAUDSLEY, about 1827.

We now come to the introduction of the "screw propeller." It is said that SMITH first introduced the screw propeller in this country, and ERICSSON in America. The same kind of engines were used for driving the propeller as were used for paddle vessels; the high speed given to turn the propeller was by means of gearing. I regard this as being one of the most important epochs in the history of the steam engine, as suitable for steam propulsion.

The first British steamer of any size fitted with a screw propeller was the "Archimedes," 237 tons, and built on the Thames in 1839. It was tested by the Admiralty between Dover and Calais with the fastest paddle wheel mail packets on the station, and so satisfactory were the results, that the Admiralty felt justified in introducing the screw propeller into the Royal Navy, the "Rattler" and other vessels being fitted accordingly. The "Great Britain," built in 1843, was the largest vessel of that day; and was remarkable not only for her size, but also because she was built of iron, and propelled by a screw instead of paddles. She was 322ft. over all in length, 48ft. 2in. broad, and 31ft. 5in. deep, with a gross tonnage of 3,270, and built to the designs of BRUNEL, at Bristol. I believe at the first, she was engined by MR. GUPPY, with one of the first direct-acting engines made, and afterwards re-engined by JOHN PENN AND SONS, Greenwich, her engines being geared to the propeller shaft. The "Great Britain" made her first trip across to New York in 15 days, and afterwards (for many years) was well known in the Australian trade. Gradually, as ocean steam-ship trade increased, and the necessity arose for extending to foreign countries (where coal was expensive, and could not be readily obtained) engineers turned their attention to a higher pressure of steam, which was thus gradually increased. Amongst those who led the way in design and construction of engines of a more economical type, are the names of JOHN ELDER, CHARLES RANDOLPH, JOHN ROWAN, EDWARD HUMPHREY, RENNIE, PENN, AND MAUDSLEY. These all deserve special mention. The first vessel fitted with compound engines by RANDOLPH, ELDER, & Co., was the screw-steamer "Brandon." On her trial trip in 1854, her consumption of coal was found to be about 3¼lbs. per indicated horse-power per hour; and the previous general consumption being about 4 to 4½lbs. A similar

Digitized by Google

type of engines had been made and used extensively for land purposes by HORNBLOWER and WOLFF; but RANDOLPH AND ELDER were the first to employ them for marine purposes.

In 1856 RANDOLPH and ELDER engined two vessels for the Pacific Steam Navigation Company, the pressure of steam being about 25lbs. above the atmosphere. The condenser was of the old-fashioned jet description, and on service the consumption of coal was 2½lbs. to 3lbs. per indicated horse-power, being the most economical marine engine of the day. The "Valparaiso" was the name of one of these vessels.

MESSRS. RANDOLPH and ELDER took up the receiver type of the compound engine at an early period of its history, and from the years 1867 and 1868, a rapid increase in the use of the compound engines took place, and in a few years they became universal to the mercantile marine.

Steam pressures soon went up to 80 and even 100lbs; thus considerably improving their efficiency, and bringing down the consumption of coal to about 2lbs. per indicated horse-power per hour, and in some cases less; but this great saving in fuel cannot be attributed solely to the high working pressure of steam, nor to the compound principle on which it is worked, but to the "Surface condenser," which, in my opinion, has done more towards perfecting the marine engine than any other invention. We are indebted to MR. HALL, of Dartford, for the introduction of the "surface condenser" (about the year 1838) which, however, did not come into general use for many years later. MR. HALL's condenser only failed because he did not sufficiently provide for the expansion and contraction of the metal tubes; and owing to the inability of keeping the tubes tight, surface condensation was thrown back several years, and we are now indebted to several other well-known engineers for their endeavours to perfect the "surface condenser." MR. JOHN FREDERICK SPENCER, of London, spent much valuable time and money to this end, and was the first to introduce the india-rubber packing at the end of the tubes in order to get over the difficulties experienced by MR. HALL.

The salting up of the boilers was a great difficulty in the way of the development of the marine engine, and, but for surface condensation, we should not have had the present compound or "triple expansion" engine. By its introduction was obviated the direct waste of heat (necessitated by continuously brining or blowing off part of the water from the boilers), and this combined with the greater degree of expansion (rendered possible by the

Digitized by Google

adoption of compound engines), working with higher steam pressures, had the desired result of reducing the coal consumption in proportion to the power developed, by more than one half; or we may say, that from the adoption of the compound engine to the year 1872, marine engineers had doubled the working efficiency of the marine steam engine. The result of this economy was a large development of steam shipping, inasmuch as it enabled the ship-owner to employ steamers profitably in trades from which they were previously shut out; while larger and more powerful steamers of the then modern type took the place of older ones. Owners of Passenger Lines went in at all risks for very large and powerful steamers, amongst the most enterprising of whom were those in the Atlantic passenger trade, the Cunard Co., the Inman Line, the Allan Line, and the White Star Line. Here mention of the White Star Line recalls to my memory their first steamer, the "Oceanic," starting on her first voyage from Liverpool to New York. I resided in Liverpool at that time, and the town (at least all those who were interested in shipping), was all excitement. To this company much credit is due, for the high rate of speed, and the luxurious and comfortable mode of travelling which now exists, and although much was said about the proportions of these steamers at the time (in fact, public opinion was against them), the owners, and builders (Messrs. Harland and Wolff) had every confidence in them, and it is needless to say that their expectations were fully realized. It is also a well-known fact that the performances of these steamers awakened the other steam-ship owners in the Atlantic trade, and led to the high rate of speed which is now attained. To the managing owners of this Company (Messrs. Ismay, Imrie, and Co.), the Marine Engineer and Naval Architect are indebted for the opportunities given of displaying their abilities and showing to the world what can be done.

The White Star Line were soon followed by the Guion Line, with their "Arizona" built by Sir William Pearce. The speed of this vessel proved superior to that of the White Star vessels. The greatest power developed in any of the Atlantic Liners previous to the "Arizona," was about 5,500 indicated horse-power, on a piston speed of about 600 per minute. The "Arizona" had cylinders 62 inches diameter, the high pressure, and two low pressure cylinders each 90 inches diameter, with a stroke of 66 inches, and was at that time considered to be quite an exceptional vessel. Her performances, however, were soon eclipsed by the "Stirling Castle." This vessel had engines with 62 inches diameter high pressure cylinders, and two low pressure cylinders, each 90 inches diameter,

Digitized by Google

with a stroke 5ft. 6in, and 100 lbs. working steam pressure. The reader of this paper, made the specification for this steamer throughout, and superintended the construction, and is pleased to have the honour of saying she was the fastest Ocean-going vessel at that period. The "Arizona" (the Greyhound of the Atlantic), however, was not long destined to hold place as the swiftest Atlantic vessel, being soon followed by the "Alaska," "Oregon," "Umbria," and "Etruria." The two last-named vessels belong to the Cunard Line, and have cylinders each as follows:—high pressure, 71 inches, and two low pressure, 105 inches, with a stroke of 72 inches, indicating 14,320 horse power, on a single screw propellor. I cannot pass over these vessels without mention of Mr. Archibald Bryce Douglas, who constructed these engines, and whom I believe to be the only engineer of the present day who has made engines to indicate 14,320 horses through a single propeller, with such success that they have done their work regularly, and without a hitch. An engineer who turns out such high-class work—and propels so many thousands of passengers to and fro to their respective ports, at such a high rate of speed, voyage after voyage, and year after year—should not only be respected by his fellow engineers, but be recognized as a benefactor to his country.

We now turn from the compound engine, in order to direct our attention to the latest type of marine engine, the triple or even quadruple principle.

The first engines made on the "triple expansion principle," were those made from the designs of Mr. A. C. Kirk (now Dr. Kirk, and of the firm of Messrs. R. Napier & Sons) in 1874, for the steamer "Propontis," owned by Mr. W. H. Dixon, of Liverpool. These engines had three cranks, and were supplied with steam by Rowan's patent boilers. During the time the boilers held good, the engines worked well, and gave great satisfaction; but unfortunately the boilers failed, two out of the four having exploded with disastrous results at sea.

The boilers were replaced with the ordinary type, working at 90 lbs. of steam, at that time considered a very high pressure. The engines worked well, but could not give the results they were designed for at such a low pressure of steam. I believe, however, I am correct in saying that new boilers have been put in, at a working pressure of 150 lbs. steam, and that these *first triple engines* are now giving great satisfaction, are a credit to the designer (Dr. Kirk), and should also be regarded as *the first triple marine engine* made and fitted with success in an ocean-going steamer.

Digitized by Google

From the year 1874 (in which I have said the "Propentis" was fitted with the triple engine) to 1881, nothing of importance was done in regard to higher working pressure of steam, than that being used in the ordinary compound engine. I can, however, from the conversation I have personally had with Dr. Kirk on the subject—assure you that it was not the want of confidence, or any misgivings whatever, on his part with regard to the principle. There was for a short time the want of a suitable boiler, or in other words, the need of a boiler which could withstand 150 lbs. working pressure, and at the same time merit the approval of Lloyd's, and the Board of Trade, in order that the shipowner might get his certificate for seaworthiness. Many schemes and experiments were made, amongst them the Rowan, the Howard, the Roots, the Jordan, the Perkins, the Herreschoff, and the Turner boilers (besides others); but all these forms failed or gave so much trouble at sea and expense to the owners, that they had to be abandoned.

The Engineer found a friend at last in *steel*, thanks to Bessemer, Siemens, and others, who worked hard and so thoroughly to obtain perfection in this material. Now, by the aid of steel we are able to make the ordinary type of marine boiler for the heavy pressure we now work at. Mention should be made here, that we do not overlook the fact that the engineer has been at work to meet the times with many clever and useful inventions, in the shape of hydraulic benders, flangers, riveters, and other ingenious tools.

Having surmounted the difficulty of the Boiler question, another serious obstacle presented itself (or I may say had for a long time been a great drawback to the engineer) viz: the want of a shipowner who believed sufficiently in the engineer, to give him a *carte blanche* to build a steamer and put in the triple-expansion engine.

Mr. Cornelius Thompson, of the firm of Messrs. George Thompson & Co., London, Sailing Ship owners, at last consulted with Dr. Kirk and Mr. Parker as to the advisability of having the triple-expansion engine in their first steamer, and ultimately Dr. Kirk's firm (Messrs. R. Napier & Sons) were favoured with the order to build the now well-known steamer "Aberdeen," which gave so much satisfaction that soon two others were built, viz.: the "Australasian" and "Damascus," and I consider great praise is due to Mr. Cornelius Thompson for the confidence reposed in these gentlemen, contributing so materially to the advancement and development of the Marine Engine. Of course it is useless for me to say that from the time the "Aberdeen's" results became known, the triple-

Digitized by Google

expansion principle became general. To all practical engineers it became apparent that the boilers under a working pressure of 150 lbs. and upwards would be a source of anxiety and trouble, and indeed this to a very large extent has been verified, in as much as the furnaces of the marine boilers under these heavy pressures have indicated weakness, and in hundreds of cases given much trouble. This difficulty is being overcome to a great extent, by supplying vessels with a fresh-water feed supply, which is a simple machine, but, in my opinion, invaluable to the safe working of the Marine Boiler at these high pressures. Moreover, the performances of the triple engines depend on our sea-going engineers, as much more is required of them now in order to cope with 150 to 200 lbs. of steam to the square inch. I think very great credit indeed is due to our seagoing engineers, seeing how rapidly pressures have increased, and how well they handle the various improved machines entrusted to their charge, including refrigerating, electric lighting, ventilating, pumping, forced draught, and a host of other inventions requiring watchfulness and skill, and without which the Marine Engine of the day would not be perfect. All have to be understood, worked, and kept in working order by the Engineer. I am sure of one thing, and that is, that engineers of our great mercantile marine are becoming more valuable and important every year to the travelling public, and to the whole community.

I might continue this paper for hours by comparisons and results of various vessels, but I must content myself with giving you a few dimensions and particulars of one or two only.

I related that in 1788 the first steamboat had cylinders 4 inches diameter, and in 1838 the "Sirius" and "Great Western" crossed the Atlantic. I have nothing to guide me as to the number of days they did it in; but the piston speed of the "Great Western" was about 210 feet per minute. The "Great Britain" crossed to New York in fifteen days on her first trip, burning about 7lbs. of coal per I.H.P. per hour. The first triple vessel, the S.S. "Aberdeen" (not taking into consideration the "Propontis") 3,600 tons, and 2,000 I.H.P., burned about 1½lbs. of coal per I.H.P. per hour.

But the first regular Atlantic Liners I know of with triple engines, are the "City of New York," her sister ship, the "City of Paris," and now, the "Teutonic," all twin screws. One can hardly imagine all the fine Atlantic Liners being compound, except the last three named, and this shews how slow many are to take up the

Digitized by Google

triple-expansion principle. The dimensions of the "City of New York," and the "City of Paris" are, 560 feet over all in length, 63¼ feet beam, and about 35 feet deep. Cylinders, 45in. H.P. 71in. Int., and 113in. L.P. by 60 inches stroke; piston speed 850 to 900 feet. Nine boilers containing 54 furnaces about 3 feet 11 inches diameter, 150lbs. of steam; indicating about 18,000 H.P., with closed stokeholds; built by J. and G. THOMSON, of Glasgow, to whom they are a great credit, inasmuch as they are making rapid and regular passages. The "Teutonic," of the White Star Line, made the fastest maiden passage across to New York on record. Her dimensions are similar to the Inman Liners, she has twin screws, worked with or without forced draught, and her boilers arranged differently from the others; her machinery about the same dimensions, and although as yet she has not quite come up to the time of the "City of Paris," she is expected to do so. The "Majestic" building at HARLAND & WOLFF'S is expected to be on the trade early next year, and is a sister vessel to the "Teutonic." The engine-room staff of each of these vessels being about 143 hands. The shipowners of Liverpool deserve the greatest praise in building these floating palaces for the comfort of the travelling public; and let us hope they will be remunerated for their pluck, as well as for the great anxiety such undertakings naturally bring.

## CHAIRMAN'S REMARKS.

### MR. J. MC F. GRAY.

The paper which has just been read to us by the President of this Institute is most appropriate in its subject, and the manner in which he has marshalled before us the principal facts in a century's improvements in marine propulsion has been most agreeable and instructive. It is, however, impossible to do full justice to any one step of that triumphant march, when in less than one hour the story of a hundred active years has to be told. The paper is very suggestive of subjects for future papers, each of which might deal with a section of the present paper, explaining at some length how defects were successively recognised, and the tentative process by which the required improvements were at last reached. If no other gentleman will volunteer to open the discussion on the paper, I will invite my colleague, MR. WYMER, to tell us some of his recollections about the last fifty years of marine engineering, as I know that he has had exceptional opportunity of knowing all that was going on in that period, and he has remembered it with great accuracy and keen intelligence.

Digitized by Google

## Mr. WYMER'S Remarks.

I think Mr. Beldam is in error in saying that the "Great Britain" was at first fitted with direct-acting engines, by Mr. Guppy. If my memory serves me aright the first engines were what are called geared engines, a large pitched chain or belt being used to get up speed on the propelling shaft. After the vessel stranding in Dundrum Bay these engines were taken out, and the vessel supplied with oscillating geared engines, by Messrs. John Penn and Son, of Greenwich; this steamer afterwards proved to be a great success on the Australian trade.

Mr. Beldam also speaks of the speed of Paddle Engines being about 200 feet per minute. In relation to this I would like to point out to the meeting a case that came under my notice in the year 1843 (being at that time an apprentice with Messrs. Caird and Co.); I was then employed on the construction of a small river steamer called the "Waterwitch," in which the late Mr. James Caird fitted a pair of engines, with two cylinders of 24-inch diameter by 4 feet stroke, the paddle wheels were 10 feet diameter. On being placed on board the vessel, these engines were driven at 66 revolutions per minute (on a speed of piston of 524 feet per minute), the vessel proving to be one of the fastest at the time on the Clyde. A tracing of a drawing made of these engines at the time in my evening hours will gladly be given to the Institute as a record of what has been done in the matter of high speed of pistons for Paddle Steamers, as it is in this direction that I think we must look for any increase of speed in Paddle Steamers.

The names of many of the vessels spoken of by Mr. Beldam are very familiar to my ears, as I can remember crossing the Bay of Biscay in the "William Fawcett" in 1834-5, again in the "Royal Tar" in 1835, and up the Mediterranean in 1836, with the "Manchester," returning to England in the "Iberia" in 1837: since which time I have been more or less connected with the mercantile marine of this country.

When a young man, in 1850-51, on my visit to Rotterdam I found compound diagonal paddle engines at work in the tug boats of the Rhine, the boilers in use being constructed in a nest of six, in one brick-work casing, with a working pressure of 80 to 100lbs. per square inch.

I remember one instance of working on board an old Spanish steamer, engined by Mr. David Napier, in which the paddle shaft,

Digitized by Google

main shaft, upper and lower cross-heads, were all of cast-iron—the eccentric sheave being loose on the shaft, it had been placed in the mould and the shaft cast inside of it, and afterwards it worked on its seat (being used as a loose eccentric) on the shaft with stops, &c.; the engines were of the steeple pattern.

Mr. Beldam's paper is one of much interest to a meeting like this, and one that should lead us to give credit to those who have assisted in bringing machinery and shipbuilding to what it is.

I shall be glad to give a drawing of the old type of engine to publish with the paper. It may be of considerable interest in these days.

## Mr. J. H. THOMSON'S Remarks.

Mr. Beldam has given us a range of Steam Pressures from 4lbs. to 200lbs. per square inch. A few years ago, when speaking to an old engineer about leaky tubes, he related his experience of one of the first vessels he sailed in, where they had some trouble with the boiler tubes when in harbour, but none at sea, for as soon as they got clear they reduced the pressure of steam to a little under the pressure of the atmosphere, and frequently made the voyage of about 500 miles at a rate of from 9 to 10 miles per hour. He did not state the consumption of coal per I. H. P.

## Mr. J. W. RICHARDSON'S Remarks.

I would like to say a few words with respect to a remark of Mr. Beldam, relating to his statement that Dr. Kirk was entitled to the credit of first introducing the triple expansion engine*; I think it is correct to state that the honour of making the first successful introduction of the triple expansion engine is due to Mr. Alexander Taylor, Consulting Engineer, of Newcastle-on-Tyne, he having fitted it on board the "Isa" steam yacht in the year 1876, with a pressure of 120lbs.; also in the steamer "Claremont," launched in November, 1881; in the "Albertina," launched June, 1882; the "Millicent," launched December, 1882; and the "Isle of Dursly," launched 7th June, 1883. The pressure of all these, except the first, being 150lbs., and all the boilers for these ships being of the ordinary cylindrical multitubular type. Most of these vessels are running successfully at the present day.

* c.f. Addenda.

Digitized by Google

Had it not been that I think this Institute should give honour to whom honour is due, I would not have troubled you with any remarks on this occasion.

I have learned that the SS. "Sexta," built by W. GRAY and COMPANY, of West Hartlepool, was in 1874, engined by the Ouseburn Engine Works, of Newcastle-on-Tyne, with a set of THREE-CRANK TRIPLE EXPANSION ENGINES, 11in., 17in., and 24in., and an ordinary circular multitubular boiler, at about 100lbs. pressure, but I understand was not a success, and the whole were ultimately taken out of the ship. This was either sometime before, or about the same time as the three-crank triple expansion engines of the "Propontis" were tried, with Rowan's patent Boilers, which MR. BELDAM mentioned in his paper as being also unsuccessful.

## MR. J. R. RUTHVEN'S REMARKS.

If the propeller is considered as part of the marine engine, then the history of the hydraulic or jet propeller must be included. The only system that I have practical experience of is that designed by my father; he has been working away at it for the last 50 years and I am happy to say is at it still.

The largest one he has designed and seen carried out is that for H.M.S. "Waterwitch." The chief interest in this system for our members is the safety of the ship. When the whole of the engine power is applied to pumping out leakage, and the ship being propelled at the same time, we may hope to hear no more of ships foundering from defects in the pumps.

When MR. WYMER read his paper on bilge pumps, and drew such a heartrending picture of the hopelessness of the state of affairs when a small pipe was choked, I could not help thinking what a grand time it will be for our members and the ship's crew and passengers when more water can be pumped out by the engines than can come through a hole two or three feet in diameter.

## MR: S. C. SAGE'S REMARKS.

I can endorse what MR. WYMER has stated about the first engines of the "Great Britain" being worked with a pitch chain, as I have often heard my father—who worked on those engines and those of the "Great Western"—speak of them. My father went to sea his first voyage as a Junior Engineer in the latter vessel, and as some slight incident—a collision I believe, occured on the voyage which resulted in a cow being somewhat unceremoniously and

Digitized by Google

suddenly introduced into his room (which was situated on the Sponson adjacent to the cowhouse), the first voyage proved to be his last, that is a member of the "Black Squad."

I can also remember myself a very much different state of things that existed when first I went to sea to what prevails now. One ship, I was second of, having the safety valves weighted to seven pounds per square inch, and I have been in more than one vessel where the two engineers, first and second, both lived in one room, and that one so small that one man had to dress and leave before the other could turn out.

## CHAIRMAN'S CONCLUDING REMARKS.

### Mr. J. Mc F. Gray.

I have much enjoyed the animated discussion, or rather pleasing additions, which have been contributed by the gentlemen who have spoken, and the author of the paper must be gratified to witness the keen interest which his paper has excited. I can endorse from personal knowledge what Mr. Wymer has said about Mr. David Napier as an able engineer. I was draughtsman where he was getting his rotary engines built, in 1854, and I then had from himself the story of all his engineering feats. I remember well how he enjoyed telling me about the cast-iron intermediate crank shaft, with the loose eccentric, cast whole and yet turned out to fit their turned seats between the two cast cranks, and how engineers in London could not make out how it was done. He may be said to have before that retired from his active engineering career, but he was still occupying his retirement in advancing engineering in new directions. The paddle steamer he was then running had a rotary engine, a surface condenser, feathering floats, a water-tube boiler with water-tube fire-bars, pressure of steam 40lbs.

The progress which has been made in marine engineering is marvellous, whether we regard the number of the steamers or the immense size and power of some of their hulls and engines. I cannot help looking at this progress as being really a continuation of the work of creation, the material and the genius being both supplied to us by the Great Engineer of the Universe, who "unseen helpeth us with faithful hand." What will be the end of this Engineering development in all directions, no man can tell, but, in the meantime, I think its contemplation is very encouraging to any one who may be asking, What is man? and what is his future?

Digitized by Google

## Mr. BELDAM'S Closing Remarks.

In reply to Mr. McFarlane Gray who has kindly presided this evening, I agree with him in saying the paper I have just read is suggestive of subjects for future papers, which I hope some of our members will kindly give. I am glad to hear from Mr. Gray also, that he assisted in some of the work carried out by Mr. David Napier, and had the advantage (as a young man) of personal interviews with him, and that he agrees in what I have said with regard to his work.

Mr. Richardson is no doubt correct in stating Mr. Alexander Taylor was (as early as 1876), a maker or designer of a triple-engine for a yacht; but it was in the year 1874 that Mr. Kirk completed the "Propontis," and although the boilers proved unsuccessful—nevertheless, the Engines were on the "triple principle" and did their work well whilst being supplied with the full pressure of steam before the boilers gave out. Mr. Wymer's remarks are very interesting indeed, and he has told us here to-night that in 1850, or 1851, he saw engines on the compound principle (on the Rhine) working at 80 to 100 pounds pressure per square inch. This is all new to me, and correct I am sure, as long as Mr. Wymer says so, and I cordially agree with him that great credit is due to the Engineer who carried out that job at so early a period, and moreover that he would have been a pioneer had he at that time made known to the world his principles. I have to thank all present for the patient hearing they have given me, and for the discussion which has been entered into with so much spirit. If I have given undue credit to any, in preference to those who claim priority—in the absence of sufficient information on the subject—my only desire has been to give as true a history as I possibly could for the information of our young members present, and not for the purpose of putting one Engineer or any particular Firm before another; and in order to open up discussion on the subject. I may be a little wrong in some of my dates, or differ from the opinion of others, but I close my remarks by saying, that I have tried to keep right to the best of my ability.

Digitized by Google

## ADDENDA.

In reference to the remarks made as to the earliest adoption of the principle involved in the design of triple expansion engines :—the end elevation of a small engine designed by MR. J. FERGUSON, of MESSRS. FLEMING and FERGUSON, Paisley, is given. The date is noted on the lithograph and may be compared with the other dates given or referred to in the body of the paper and discussion.

The original engine designed by MR. FERGUSON, and which it was *intended* to construct, was of the same type as that shown but with large cylinders, *i.e.*, H.P 40in., Int. P. 60in., L P. 100in.

The same proportion was adopted for the smaller engine,—H.P. 4in., Int. P. 6½in., L.P. 10in.,—which was fitted in the "Mary Ann," owned by MR. O'BRIEN, of Rangoon. The vessel is still running, and is reported to have given every satisfaction to the owners.

This information has been furnished by MESSRS. FLEMING and FERGUSON, and it is added here in order to give due credit to MR. FERGUSON for his enterprise and his work as a Pioneer.

J. A.

Digitized by Google

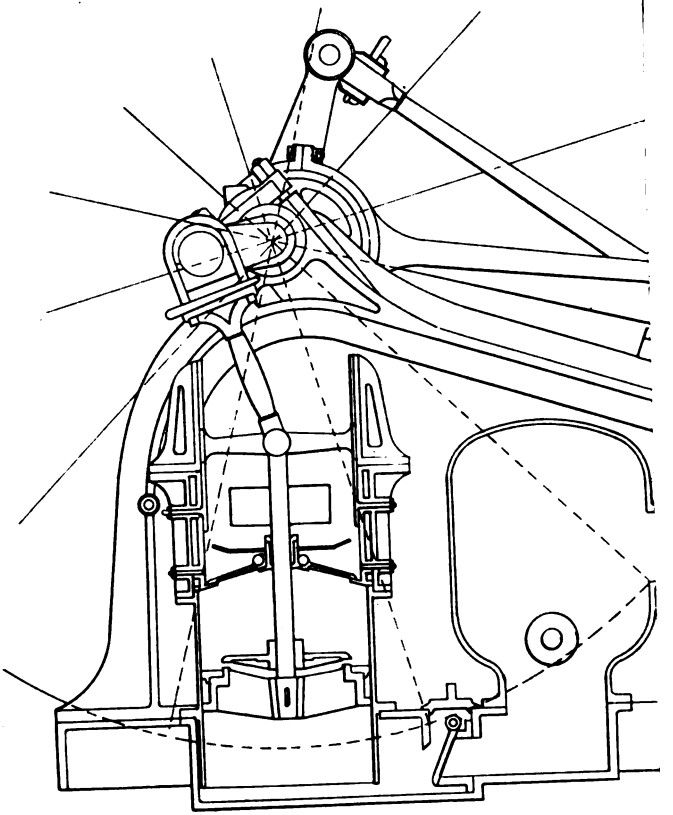

Seal

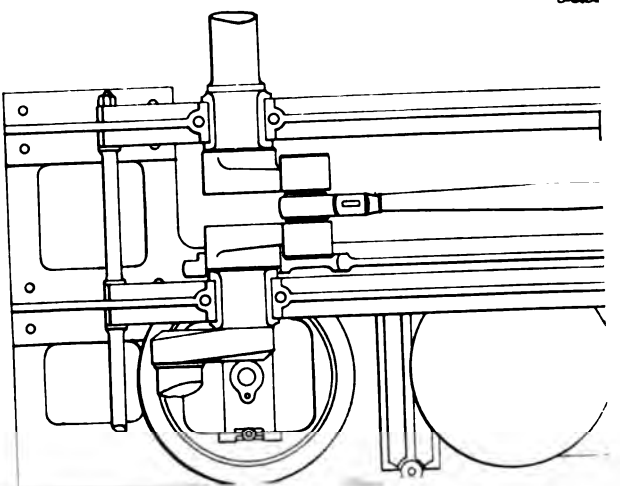

Digitized by Google

Digitized by Google

Digitized by Google

FERGUSON, OF FLEMING AND

ISON, PAISLEY.

Digitized by Google

# INSTITUTE OF MARINE ENGINEERS.

**SESSION, 1889-90.**

---

# NINTH PAPER,

(OF TRANSACTIONS)

BY

## MR. J. D. CHURCHILL

(MEMBER),

ON

# MARINE ENGINE GOVERNORS,

## AND THE BENEFITS DERIVED FROM THEM.

**Read Monday, 18th November, 1889.**

---

PRICE SIXPENCE.

---

THE LANGTHORNE ROOMS, 15 AND 17, BROADWAY, STRATFORD.

Digitized by Google

# Institute of Marine Engineers.

*President:*

ASPLAN BELDAM.

*Vice Presidents:*

G. W. MANUEL.
H. M. RAIT.
J. WEIR.
A. W. ROBERTSON.
H. PRIOR.
J. TAIT.
J. MACFARLANE GRAY.
F. W. WYMER.
A. THOMSON.
W. J. CRAIG.
J. H. THOMSON.
T. W. FISH.

*Hon. Treasurer:*

J. W. DOMONEY.

*Council:*

L. P. COUBRO.
A. GIBB.
R. LESLIE.
D. McMILLAN.
M. PRIOR.
T. W. SHOREY.
D. GREER.
J. G. HAWTHORN.
W. P. LAING.
A. J. MAGINNIS.
J. R. RUTHVEN.
J. STEWART.
W. M. TAYLOR.

*Hon. Secretary:*

JAS. ADAMSON.

Digitized by Google

THE LANGTHORNE ROOMS,
15 AND 17, BROADWAY,
STRATFORD,
*November 18th, 1889.*

## PREFACE.

A meeting of the INSTITUTE was held this evening, presided over by Mr. J. McF. GRAY, when a Paper on *Marine Engine Governors* was read by Mr. J. D. CHURCHILL.

The Paper, and the discussion which ensued, will be found in the following pages.

The subject matter of the Paper is of great interest, and the remarks made during the course of the discussion revealed the fact that, in a large majority of steamers, the Governor is not held in much esteem, for one reason or another.

A desire was expressed that we should have another Paper and discussion on this subject; and it was arranged that a Paper should be read by Mr. Churchill on his own Governor. This desire may be met probably before the close of the present Session.

In order to save the labour and expense of sending special notice to each member regarding meetings, it has been proposed to post intimations on the board in the Reading Room, and in addition give notices to the various journals and papers by the courtesy of whose editors and proprietors, our meetings have been hitherto intimated, and afterwards reported, as:—*The Engineer*, *Engineering*, *Iron*, *Fairplay*, *Industries*, *The Practical Engineer*, *Mechanical World*, *English Mechanic*, *Iron and Coal Trades' Review*, *Stratford Express*, *Greenock Herald*, *Lennox Herald*, *Irvine Herald*, *Ayrshire Post*, and others of the weekly journals and papers; *The Marine Engineer*, *Shipping World*, *Steamship*, *&c.*, of the monthly journals; *The Shipping Gazette*, *Liverpool Journal of Commerce*, and other daily journals and papers.

Will members please bear this in mind?

It should also be borne in mind that the Annual Subscription is due from each member on the anniversary of his election.

Notices of the Annual Meeting to be held on Friday, March 28th, also voting papers for the election of Office Bearers and Council for 1890-91, and copies of the Articles of Association and By-laws (1s. each) are being prepared, a copy will be sent to every member.

JAS. ADAMSON,
*Hon. Secretary.*

Digitized by Google

Digitized by Google

# MARINE ENGINE GOVERNORS.

THE WRITER does not propose to go into the mechanical question, but is more particularly desirous of bringing before your notice some facts connected with Marine Engine Governors which may not have presented themselves to your minds; also to meet objections sometimes raised to their detriment, feeling confident that if they were more thoroughly understood, they would be much more highly appreciated, and the frivolous objections sometimes raised would be appraised at their real value.

Judging by the writer's experience, which is far from limited, Governors have rarely received the attention they deserve. They have a very considerable and direct bearing on, or connection with, the question of preventable damage and losses at sea, consequently they ought to receive special attention from those interested.

Where human life and enormous amounts of valuable property are at stake, it is the bounden duty of all concerned, whether owners or otherwise, to insist on every possible precaution being taken to minimise the risk; therefore, any appliance or arrangement which in any way tends to this desideratum demands careful and prompt consideration. Political economists tell us that every loss, whether of life or property, is a national loss, and is not confined to the individual.

It is not necessary for the writer to explain the Mechanical details and action of his own Velometers and Governors, seeing that there are upwards of 2,200 of them in use, which may be accepted as ample proof of their efficiency.

Digitized by Google

The Compound Attachment is an arrangement actuated by the Governor, by which all the cylinders may be controlled. If perfect Governing is required this should be fitted in all cases.

The writer's remarks refer solely to Governors operated or driven by the main engines, as he considers all others are but very poor apologies and not entitled to the name of "Governor," as they have only occasional control over the engines, not available in case of accident, whereas, a real Governor, properly fitted and worked, has continuous control over all the cylinders under all conditions and circumstances.

Governors are frequently fitted in positions most difficult, sometimes dangerous, to get at, giving the idea that they are not intended to be used, only viewed from a distance. Consequently they are not always kept in proper working condition, much less continuously at work, as they ought to be. This is not fair to the makers, and, unfortunately, they are not in a position to insist on proper fitting and ocation of the machine.

A strong protest ought to be entered against Governors being considered as only rough weather attachments. They are *that* and very much more. A Governor is as much an integral part of an engine as a safety valve is an integral part of a boiler, or an automatic brake is of a train. The law compels you to fit these to prevent accident. For precisely the same reason it ought to be compulsory to fit a Governor. A Governor is, pre-eminently, a safety appliance, and not as most people imagine, simply a machine to prevent racing. It is a safety appliance directly affecting, as it tends to prevent or minimise the effects of a break down, and possible loss of life and property at sea, and as such it ought to receive very special attention from those responsible for the lives of our sailors and passengers.

The machine ought to be so fitted as to be easily accessible from the starting platform, and so that whenever the engines are at work it shall be in operation. It ought not to be optional with, or even left to the discretion of, the engineer on watch to decide when it shall be put on, unless you can make it optional with him, or leave it to his discretion, when an accident shall happen. It is an automatic check in case of accident, and common sense and common humanity demand that it should be a permanent attachment and continuously at work.

A good Governor, if properly fitted so as to control, at any rate,

two out of the three cylinders, will prevent racing, but it is unreasonable to expect it properly to control a three or four cylinder engine when it only has hold of the H.P. cylinder, thus leaving two-thirds or three-fourths of the engine uncontrolled just at the most critical moment. If a Governor and Compound Attachment are properly fitted to an engine, no matter how many cylinders it may have, it will be held under perfect control with full steam on, and the ship may be driven, —so far as the engines are concerned, and without reference to those on deck—at full speed in the heaviest weather, and there will be no indication of racing.

It is in heavy weather when the engines are subjected to violent shocks and stresses, caused by excessive and sudden variation of load, that the damage commences, but owing to the engines being eased down, the beginning of an accident does not then appear. When the weather moderates the real danger of a break down arises, as full steam is then put on, stressing everything to its utmost, and then follows the collapse.

Perhaps it has never occurred to many to notice when break downs take place. By far the largest proportion occur in fine weather, and not in rough weather. It is in fine weather that the engines are most severely pressed. If the shaft breaks, the engines will fly away at an unknown speed, and, before the engineer has time to think, much less to act, it is through the ship's side or bottom, or the stern is pretty well shaken off, in either case producing serious leaks, as in the case of the s.s. "Danmark," where some 800 lives were in peril from this very cause. If a good Governor properly fitted is continuously at work the engines could not practically exceed their normal speed; thus the danger and damage would be reduced to a minimum in case of accident, as it would give the engineer in charge a chance to stop the engines before much damage could be done.

The injurious effects of racing are felt throughout the whole engine and its fittings, and the author cannot do better than quote the words of a well-known writer on this subject, Mr. T. G. Barron, who speaks from long practical experience at sea. He says: "When an engine attains suddenly a speed of double the number of revolutions per minute at which it is intended to run, and is as suddenly brought up to its normal rate, it may be said to be racing, although very much worse racing than this is common enough; and the whole strain of the sudden check to the engines, caused by the extra resistance offered by the water to the propeller as it dips, after being partially or wholly

lifted out of the water, must necessarily be transmitted through the whole length of shafting and coupling bolts from the propeller shaft to the crank shaft. If the Governor is quick enough to check the racing before the propeller is again immersed, the twisting strain to the shafting will be avoided, or at least greatly reduced. There is also a severe straining to the pumps, pump rods, and links, caused by the racing, the pumps being unable to deliver the water quickly enough; and the bucket valves coming down heavily on the surface of the water put extra weight on the rods and other gear, as well as destroying the valves. The feed pumps being only partially filled with water, and the rams coming suddenly in contact with it give a shock to the barrels of the pumps, and also to the pump crosshead, etc., which is not the case when running at their normal rate. A continuance of this vibration loosens the foundation plate of the engine, and in fact it would be difficult to say where the evil of racing ends, and it is only necessary for the shipowner to know a small portion of it in order to see the benefit of a thoroughly efficient Governor."

Only quite recently we have had reports of serious damage having been done by racing to the pump valves, condenser doors, etc. In one case the condenser doors were cracked, and the main steam pipe caused to leak, necessitating the stoppage of the ship at sea for repairs, generally a very difficult and dangerous operation.

Amongst other very serious results of racing is the loosening and frequent fracture of the stern tube and bush, and damage to the hull caused by excessive vibration; also the great alarm it causes on board passenger steamships, a serious consideration, though it has neither a mechanical nor economical bearing.

There is also the prejudicial effect of vibration, such as that produced by racing, on the chronometers and compasses. This is confirmed by the leading makers of these instruments.

If an ungoverned engine gets away, which it may easily do, to three or four times its normal speed, it will cause considerable agitation of the water in the boiler, materially facilitating, if not actually causing, priming, especially in boilers so inclined, thereby incurring the risk of serious damage in the steam pipes by water hammering, and breakages in the cylinders. The condenser is liable to become overheated, owing to the circulating pumps not working efficiently at racing speeds, causing partial or total loss of vacuum when the full

Digitized by Google

power of the engines is required, danger of leakage, and breakdown of condenser through undue expansion and contraction. These difficulties can only be overcome either by throttling (wiredrawing) the steam, or else linking the engines up, in both of which cases there is a material loss of power and speed, which can almost entirely be avoided by the use of a proper Governor.

It is sometimes stated that even if triple engines do race, it is not as objectionable as with two crank engines. Such a remark can only apply to one's personal comfort, as acceleration of speed means a considerable increase of wear and tear.

All experience proves that under similar conditions a three crank engine will get away more quickly, and run at a higher speed, than one with two cranks. Granted the three-crank may run more smoothly than a two-crank, and its racing, therefore, would not be so uncomfortably perceptible; but all other objections and risks remain, and if anything, are increased.

While compound engines were in vogue, there was hardly an engineer but who insisted on having them fitted with reliable Governors; but since the introduction of the triple compound engine, an idea seems to have got abroad that they do not require Governors—why or wherefore it is difficult to explain.

There is no doubt that the late low prices and keen competition have considerably militated against Governors; and the writer cannot but think it is a "Penny wise and pound foolish" policy to cut them out of the specification. A paltry saving of a few pounds as compared with the value of human life, and the jeopardising of such enormous interests, seems a parsimonious course.

Some engineers maintain that triple expansion engines "being so well balanced," do not require Governors. Now it appears to the writer that this is an idea that has been adopted without due consideration, and he hopes to prove the argument untenable.

So far as the writer can learn from these gentlemen, the balancing consists in the engines having three cranks, thus giving a more uniform turning moment to the crank shaft than in the compound engine. No one will deny that the three cranks may balance each other, but *there* the balancing ends, for as soon as you get away from your cranks the unbalancing commences: first of all in the weights of the pistons:—the

Digitized by Google

L.P. being from four to six times the weight of the H.P.: then, secondly, there is frequently a very large discrepancy in the power developed by the respective cylinders, which fact seems to have escaped the notice of the disbelievers in Governors.

Of course, this statement may be met with the remark that such ought not to be the case. It is admitted that it *ought not to be*, if it could be avoided, but it cannot be denied that through some cause or other this is invariably the case.

The writer originally intended to have got together as large a number of indicator cards as possible, and from them to have worked out the indicated powers, but on further consideration it occurred to him that he might be charged with selecting only those cards which would support his line of argument. To avoid anything like a suspicion of this he turned to the technical journals for information, for authoritative information, and there can be no question of incorrectness, the articles having been prepared by those who knew exactly what they were writing about, thoroughly competent men, who have undoubtedly presented to us the best phase possible of their respective engines.

The writer has referred to all the accounts he could find in these papers of the trial trips of a number of steamships fitted with triple compound engines, and finds that the discrepancy between the power developed by the cylinder doing most work and that doing least in any one engine is not less than 34·02 °/₀ on the average. The analysis of these discrepancies is very interesting.

On reading this paragraph over to an engineer the writer was met with the reply :—" The L.P. generally indicates more than the H.P. because of the pumps." This led him to analyse the cases in question, with results as follows, which are scarcely in keeping with the explanation given.

| | | | | | |
|---|---|---|---|---|---|
| H.P. | is highest | in | 33°/₀ | of the | cases. |
| I.P. | ,, | ,, | 16·66°/₀ | ,, | ,, |
| L.P. | ,, | ,, | 50°/₀ | ,, | ,, |

On further analysing this the writer finds that the

| | | | | | | |
|---|---|---|---|---|---|---|
| H.P. | is highest | and | L.P. | is lowest | in | 33·33°/₀ |
| Int. | ,, | ,, | H.P. | ,, | ,, | 16·66°/₀ |
| L.P. | ,, | ,, | H.P. | ,, | ,, | 33·33°/₀ |
| L.P. | ,, | ,, | Int. | ,, | ,, | 16·66°/₀ |

Digitized by Google

These discrepancies, it must be borne in mind, have all appeared when the engines have been working under the most favourable conditions, and when in the hands of the most skilful men, working under the closest supervision of those interested in obtaining the best results. When these engines are put to their ordinary work these discrepancies come out very much heavier. The best engine included in the group giving the above average only showed a discrepancy of a little over 10°/₀ in the published report of her trial trip, but the writer has seen numbers of her cards under ordinary working conditions, and finds that the difference is never less than 23°/₀.

In the trial trip reports 71·42°/₀ of the cases show a discrepancy of 25°/₀ and upwards, and 21·42°/₀ show discrepancies of upwards of 50°/₀. It is a remarkable fact that not one of the engines referred to in the reports on the trial trips is anywhere near being balanced, and some of them in ordinary work show more than double the difference indicated on the trial trip.

The writer considers the above figures pretty well dispose of the theory of perfect balancing, which is so frequently referred to in contravention of facts, and fully proves the fallacy of ignoring Governors, on this ground, at any rate.

Not long ago a friend of the writer's was in treaty with a well-known engine builder for a pair of triple compound engines. When they came to the question of Governor, the builder assured the intending purchaser that he built engines strong enough to stand any amount of racing.

The writer, to convince his friend that the statement was not true, took the trouble to hunt up the breakdowns of engines built by these particular builders. It is certain they would not like the writer to reply to their ad-captandum statement by publishing the list, which contains a good round "baker's dozen" within a very short period.

There is a proverb about those who live in glass houses, etc. The engine that cannot break down has not yet been built.

During the last eighteen months the writer has received particulars of 217 accidents to cranks, screw shafts, and propellers at sea. This number is exclusive of fractures and other defects found out in port and repaired. Out of the number 127 were broken shafts, in every one

Digitized by Google

of which the safety of the ship, and the lives of the crew and passengers, were more or less imperilled. The cases referred to, doubtless, only form a minor portion of the total accidents.

Besides these, there are numbers of screw steamers missing every year with all on board, and the writer is supported by competent authorities in the opinion that the major, or at any rate, a very large portion of these, have gone to the bottom through accidents similar to that which occurred to the s.s. "Danmark," where the broken shaft pounded a hole through her bottom. Doubtless, all have heard of many very narrow escapes from similar causes in which they have only just had time to get the bulkhead doors closed and so save the ship.

It is hoped that the facts set forth in this paper prove the necessity of having a thoroughly efficient Governor, properly fitted, and continuously running. Of course, it is impossible for a Governor to prevent breakdowns, but when they unfortunately occur the effects are minimised.

The following is an extract from a letter received from a well-known engineer:—"The non-fitting of a Governor is a piece of culpable negligence"; expressing an opinion in which all interested in steamships should fully concur.

The writer trusts he has succeeded in bringing forward and establishing many reasons why Governors should be fitted. Many of these reasons he has never heard referred to in discussing the question, and can only conclude that they are not generally known. If these facts cause Governors to be considered as necessary permanent attachments for marine engines he will feel that his work in preparing this paper on "Marine Engine Governors,—Beneficially considered," has not been spent in vain—and trusts the future will prove that he has, if only in a small degree, contributed something to the comfort and safety of those at sea.

---

## CHAIRMAN'S REMARKS.

(Mr. J. Mc F. Gray.)

The Marine Governor is a subject upon which most of those present ought to be able to speak from their own experience. If Governors, where they are already fitted, were kept in action

Digitized by Google

continuously on the voyage, irrespective of the state of the weather, as is recommended by the author, they would be likely to be better attended to, and the refinements of their action would become better understood by engineers, and the improvements still required in their construction would be hastened. It is only by continuous action that their utility as safety appliances can be tested. The Marine Governor requires but little steam to drive it, it occupies little space and its cost is out of all comparison insignificant in relation to the value of life and property it may be the means of saving by minimising the damage done when a shaft breaks, when under way. It is in this respect like one of the many automatic nerve actions with which the human body is provided. To save the eye from a blow the eyelid shuts and the hand is raised, and, in falling, the hands are spread out, without conscious thought. The Governor arrangement, which does this for *us*, is always in gear, even when a fall or injury to the eye is least to be expected. When a Governor does not act satisfactorily, the engineer ought to report it and have it put right or else taken away. I remember having to go to examine a Governor which had been in this way condemned by the engineer. I found that the connection had been wrongly made; the Governor was set to open the valve when it ought it to have been shutting it. I had it altered, and there were no more complaints about its action. I am afraid that a great deal that is said against Governors has originated in such mistakes. Governing the throttle by hand, for hours in succession, is a nagging, tiresome job, more suitable for a mechanical automaton, which the Governor is. It is difficult, if not impossible, to control the throttle by hand to limit the variations of speed within as small a range as can be maintained by a good mechanical Governor. Very hazy notions are sometimes held about the degree of variation of speed within which the screw continues to be a propeller. Whenever the speed of the screw is effectively less than that corresponding to the speed of the ship the screw is a drag, not a propeller. If when the engines are running at 60, the slip is 10 per cent., then when slowed to anything below 54—the speed of the hull not having altered—the action becomes a sternward pull upon the hull. Negative slip is not at present considered. The velocity with which the flat of the blade strikes the water is, about, as the difference of the revolutions above or below the number which gives the speed of the screw the same as the speed of the ship. That difference in the numerical example given was six; when the revolutions are 72 this difference becomes 72—54=18, and then the flat of the blade strikes the water at $\frac{18}{6}$, three times the velocity with which it acts when

Digitized by Google

running 60, the speed of the hull all the time corresponding with 54 revolutions per minute. When the revolutions are just this number when the stern dips and the blades enter the water, then the shock on striking the water is least—it is wholly edge on.

When the screw re-enters the water at double the ordinary speed of rotation the relative velocity with which the flat of the blades strike the water is eleven times greater than its ordinary pushing velocity with 10 per cent. slip, and it must be very detrimental to shafting to be subjected to the frequent excessive strains which are in this way produced by racing. A good Governor ought to keep up the speed of rotation to be something over the normal speed when the blades are again being immersed, so that, as the stern descends, the revolutions may not be diminished below the normal speed.

Although the paper does not describe any particular make of Governor, it would have been better if we had had drawings of different kinds before us during the discussion. As I have not seen the Compound Attachment which is named in the paper, I would be pleased if Mr. Churchill would describe to the meeting, how the valve controlling the low-pressed is constructed, as I am sure few of us have seen the arrangement applied. Will he also tell us about what size the connecting pipe is, and what is done to prevent the volume of this pipe from adding to the unavoidable waste capacity at the ends of the cylinder?

---

## MR. ROWE'S REMARKS.

For the last ten years I have observed how reluctant Engineers are to use the Governors supplied to their vessels, to keep the engines from racing in stormy weather. Now every effect has a cause, and no doubt the Chief Engineers who are present will be able to explain the somewhat strange fact I have called attention to. I agree with Mr. Churchill that excessive racing is likely to reveal defects in shafting, and sometimes lead to breakdowns. In my opinion a reliable Governor is a most useful adjunct to marine engines. Opinions might differ as to which type of Governor is best; but though the pendulum type is simple, and does not depend upon the accelerating motion of the main engines, it is non-effective when the vessel is running in heavy

Digitized by Google

weather, because the whole depth of the stern post (including, of course, the propeller) is frequently exposed to view by the rapid passage of a following wave. I have often observed this, even when long vessels were on a level keel.

---

## MR. L. P. COUBRO'S REMARKS.

My experience bears out what has been said by Mr. Rowe about Engineers not taking the trouble to put on the Governor in heavy weather, as, during my short experience as a sea-going Engineer, I have a lively recollection of many uncomfortable hours "standing by" the throttle valve. I think that if, when ships were in course of construction, the Governor were so placed as to be easily accessible and easily put in gear, this would not be the case to such an extent as at present. I believe the Chairman went to the root of the matter when he said that, in a great many cases, where it was said the Governor was not working properly, some slight mechanical defect was all that was wrong; and that, if it were so placed as to be easily got at to be overhauled and repaired, instead of being stuck up, when fitted originally, in some out-of-the-way corner (as is frequently the case at present), we should hear less of the Governor being only a useless ornament in the Engine room.

---

## MR. W. W. WILSON'S REMARKS.

In continuation of the remarks by Mr. Rowe, might I suggest that perhaps most of the Engineers who have related their experiences or have expressed their opinions as to the non-use of their Governors, had a similar experience to myself regarding them. Some years ago, when I was sailing as Junior Engineer in a certain ship, we encountered verv bad weather on one occasion and the Chief Engineer decided to use the Governor instead of throttling by hand as we had been doing. The pulley for driving the Governor was fixed on the shaft, between the turning gear wheel and the bulkhead, which was a very limited space, and to get the rope adjusted into its proper position for being tightened fair on this pulley, one person had to go down

Digitized by Google

into the bilges on one side of the shaft and another on the other side. In the instance referred to, the second Engineer who had charge of the tightening gear lever, either used too much force on the same, or tightened too early, and the consequence was that the rope caught, broke, lapped round the shaft and jammed itself firmly between the pulley, coupling bolt, heads, and bulkhead, we (the engineers who were below) narrowly escaping being drawn round the shaft with it. I think as far as I can remember, so long as I remained in that ship, the Governor was never used again.

Now I contend that in a large number of ships fitted previous to ten or twelve years ago, these pulleys for actuating the Governors were placed in far too inaccessible positions, and rather than risk their lives trying to get the Governor in gear, the Engineers preferred to work without it and continued to throttle by hand. I know that now in most of the new ships, more attention is paid to the fixing of these pulleys in better and more accessible places, and in one vessel in which I subsequently served, we had a very good arrangement, driven by friction, and which was easily put in gear without incurring the slightest danger.

This worked very well indeed when required, the only trouble being the stretching of the driving rope.

---

## MR. F. W. SHOREY'S REMARKS.

I am not acquainted with the Churchill Governor, but if I understand rightly, Mr. Churchill said that with compound engines he connected a pipe from the high pressure cylinder to the top and bottom of the low pressure cylinder, so that when the speed of the engine was accelerated, the Governor was so adjusted as to close a valve in the pipe of the H.P. cylinder, and open valves in the pipe of L.P. cylinder, and admit steam on both sides of low pressure piston, thereby making the pressures equal on both sides of low pressure piston, and retarding its motion.

This I take it, would apply to compound engines only, and if such is the case, how would Mr. Churchill apply it to triple and quadruple engines? Would he, in the case of triple, control all cylinders alike?

Digitized by Google

That is to say, would he control the intermediate engine, by admitting steam from the high pressure cylinder to the top and bottom of intermediate piston, and in like manner control the low pressure piston by the steam from the intermediate cylinder?

In my opinion, the reason why so many Engineers discard the use of the Governor in bad weather, is that many of the Governors fitted to engines do not act quickly enough to check the engines racing, and the Engineer finds that he can do it much more effectively by working the throttle himself.

I have some very unpleasant recollections of crossing the Bay some years ago. It was in the month of November, and we had some very dirty weather, and the engines were racing very much. We put on the Governor, which was one of Silver's; but found we could not get it to act quickly enough to be of use, so had to disconnect it, and work the throttle valve by hand, finding this means more effective.

Now, what we want is a good Governor that will anticipate the racing, for it would be a great boon to Engineers; they could then rely upon the Governor to regulate the speed of the engines, whilst they attended to other things requiring their attention in the engine room and stokehole, many of which must be neglected if they have to stand by the throttle valve.

---

## MR. JAMES ADAMSON'S REMARKS.

Our thanks are due to Mr. Churchill for bringing this subject forward in the manner he has done. I was pleased to find that the Paper he proposed to read dealt with principles rather than specialities. The resulting discussion should therefore be educational, not personal; this is entirely in accord with the views of the Council, views which, when I expressed them to Mr. Churchill, he endorsed in words at the time, and this evening has done in deed.

We have all had some—many here have had much—experience of Governors, good, bad and indifferent in their action, and I should say from what I have observed, Marine Engine Governors are, as a

Digitized by Google

rule, not held in much esteem. They are neglected and only used occasionally, and seldom looked upon in the light that they are held by the author in the Paper just read.

Some time ago my attention was called to the want of action in a Governor. I found the connecting rope had been placed to run the reverse way to the intention of the maker, and closed the valve when the reverse action was wanted. There were other defects in connection with the gear, which were sufficient to indicate a great want of attention to the details of fitting and to the efficient working of the Governor.

I am of opinion that a good Governor is a desirable addition to the outfit of an Engine; but it seems to me that something is wanted to call attention to the services which may be rendered by a reliable Governor, and at the same time ensure that the connections are properly made and fitted; this, I apprehend, is one of the objects aimed at in the Paper.

---

## MR. W. J. N. BRETT'S REMARKS.

As my opinion, I should like to state that I do not think the hand can manipulate the throttle valve in such a sensitive way as a good steam automatic Governor. As an instance I will mention the Churchill Governor fitted to the P. & O. "Oceana," which for its work is an efficient and very beautiful mechanical contrivance, acting on a very slight change of speed, and, I believe, serving its purpose well.

---

## MR. A. SCOBIE'S REMARKS.

In reference to the Governors for Marine Engines, I may say I have had experience of them during 25 years as Chief Engineer of different vessels, and always found when the ship was pitching heavily the Governor was of little service in preventing the engines from racing, as when the propeller is leaving the water it closes too late, and does not open soon enough when the propeller is being fully immersed. I have found when the ship gives a heavy sudden pitch, the valve closes

Digitized by Google

and the Governor has not sufficient power to open it, thus frequently involving the use of the crow-bar, or other outside means to open it. On one occasion, what nearly proved a very serious accident happened to a ship I was in, on account of the valve closing and jamming. During a heavy gale the ship was pitching badly, when suddenly she gave a heavy plunge and the valve shut with great force, and held so that the main stop valve had to be closed to remove the pressure off the back of the valve before it could be opened; while this was being done, the ship lost way, and could not be kept by the rudder; she fell into the trough of the sea, and rolled so heavily that everything loose on deck was carried away by the sea. When the Governor valve is closed the full pressure of steam acts on the back of the valve, so that if the Governor springs and rods are not sufficiently strong to open it, the artificial means I have referred to, have to be used. I may also mention that before this accident took place, the Governor had been at work for several hours and to all appearance doing well, but still, not acting at the right moment, until the ship took the extra sudden pitch and jammed the valve and kept it from opening. I have had immediately to disconnect the Governor and work the engines with the hand throttle valve during heavy pitching.

I understand there are some *improved* Governors now in use, acting much better than those I have had experience of. The makers of these I hope will allow sufficient strength in the springs, rods, and connecting gear, to open the valve when closed suddenly, owing to the heavy pitching of the ship and the steam pressure acting on the back of the valve.

---

## MR. J. H. THOMSON'S REMARKS.

In vessels constructed to run, say, at about sixteen knots per hour, and while under ordinary circumstances it may not be necessary to exceed twelve or thirteen knots, the area of the steam pipe and throttle valve is so much in excess of that required for the lower speed, that the throttle valve to get full control of the engines, must only move through a small arc, and requires to be adjusted for that speed. In many cases sufficient allowance for this adjustment of the levers and rods is not made by the builders.

Digitized by Google

I sailed for some time in a vessel, which invariably had to be worked at full power, and when it was necessary through rough weather to connect the Governor, it was quite a pleasure to see how well the speed was regulated; however, if we had to reduce the speed, the action was not so satisfactory, and required a readjustment of the levers to obtain a steady motion.

---

## MR. W. W. WILSON'S FURTHER REMARKS.

As bearing out Mr. Thomson's remarks regarding the amount of the travel of Governor valves being rendered useless when engines are throttled up, I may mention that when I had just finished my apprenticeship, I had to do with a Governor, which, although not a Marine one, may serve to illustrate the point. The arrangement was, roughly speaking, as follows: A starching mangle and a set of drying cans in a calico printing work, were designed, so that the cloth on leaving the one was passed direct into the other machine. The two machines were driven by separate engines of different sizes. The Governing apparatus employed was a roller properly balanced, and was hung on two standards situated between the two machines, and over which the cloth passed whilst travelling from one machine to the other, the cloth causing the roller to rise or fall as the tension caused by the difference of speed of the machine increased or decreased. This roller was connected by levers to work a valve on the second engine.

When this was first started, difficulty was experienced in so regulating the speeds of the two engines, that the cloth passed through both, without being either torn asunder or coiled up in a heap at the foot of the standards which carried the Governing roller. After adjusting the Governor valve (which was an equilibrium one) by considerably reducing the lift and altering the levers, the machines were so arranged that when the main stop valve, common to both engines, was opened, the Governor so regulated the speed that the machine would work a whole day, if necessary, without once making the slightest hitch, either in tearing the cloth or coiling up the slack, as I have mentioned.

Digitized by Google

## MR. A. BLAIR'S REMARKS.

I have had some little experience as a sea-going Engineer with different kinds of Marine Governors, of which some do their work better than others.

When I have had occasion to put the Governor to work, and found it did not act properly, I would make it my study to examine into it, also see that the levers were the right length and set properly, the same with regard to the connecting rods, and by doing so I always got them to work very well.

I know of two similar steamers which are fitted with Governors by the same maker: the Engineer of one, when questioned regarding it, replied, that the Governor did not work very well, and that he did not use it. The Engineer of the other steamer when asked how his worked, said he had taken it all to pieces, cleaned and oiled it, as it had been lying in a dirty state and had apparently not been used; he was so pleased when he had occasion to use it after the overhauling and repairing, that he considered the formerly despised Governor as good as another hand in the engine-room. I have sometimes had the same difficulty as Mr. Wilson has mentioned as to the putting on of the Governor rope, when the pulley has been fixed on the shaft between the Engine-room bulk-head and the turning wheel—there being very little space—necessitating an engineer going into the bilges to put the rope on when the vessel has been rolling and pitching heavily.

I have known several instances in which Engineers have put on the Governor, and finding it did not work all right they have taken it off without troubling themselves any more about it.

Again I have known vessels making two and three voyages and at the end of each voyage the Engineer has required some slight alteration to be made in the connections in order to improve the working of it, the alterations being due to no fault of the Governor, and I may say they worked to the satisfaction of the Engineers afterwards when properly adjusted.

A great deal rests with Engineers themselves if the Governors work well or not, it is only by giving a little attention and keeping them in proper working order that they will give satisfaction. I consider a good working Governor to be a great friend to the sea-going Engineer.

Digitized by Google

## MR. A. W. ROBERTSON'S REMARKS.

I regret I was not present to hear Mr. Churchill read his paper on the Marine Governor. As I have only been here a few minutes, I have heard very little, but from an experience of about eight years as Chief Engineer, I may be allowed to make a few remarks in reference to the old and new style of Silver's Governors that I had to deal with. Unfortunately, I have never been with the Churchill Governor, and therefore cannot speak of its merits; but of the Silver's I would say, that during my experience, I never found it work satisfactorily in really bad weather where there was any driving. In moderately bad weather and fairly easy going, it worked all right, so long as the points put forth by Mr. Blair were attended to. The standing by the throttle valve was always the most efficient in my experience, in the "Navarino" and other steamers.

As the steamer generally rolls when it is pitching, the chief cause of danger through racing is the unequal strain thrown upon the engines by the air pump. At times it works without effect for several seconds, because the water is away from it. At other times it is heavily charged, thereby causing heavy straining and jarring, "that unpleasant working" so well known to the Marine Engineer.

With the Chairman's permission, I will relate an experience I had a few years ago in a steamer from London to Liverpool. The ship was light, and when rounding Land's End the weather was very heavy, with the ship rolling and pitching about. As the Governor was of little use, the Engineer took the throttle valve, effecting a great improvement, but even with that, the jarring through racing sent its shock through the whole of the ship. On rounding Holyhead, we had similar weather, but, "with the air pump disconnected," the vacuum being about the same, the jarring was practically nil, as the faster the engines went the smoother they ran, and I cannot see how the Marine Engine should not be run at the rate of double—or even higher than—the ordinary speed for a few seconds, without creating the tearing and jarring so common with the ordinary Marine Engine, at an increased and varying speed. The Marine Engineer in the future, would do well to consider the advisability of making the engine capable of increased and varying speeds when running in a heavy sea, without the risk of a break down; if this were done, so that there would be a good factor of safety, the *risk* due to *racing* would disappear.

Digitized by Google

## MR. ROWE'S REMARKS.

In proposing a vote of thanks to Mr. Churchill for his very interesting paper, I hope I will not be misunderstood when I say that Mr. Churchill has probably received information of great value to him. It is important for inventors to learn from practical engineers what mechanical and other difficulties are met with in the working of inventions; and certainly Mr. Churchill this evening has become acquainted with some of the rocks upon which many good Governors have been wrecked.

---

## MR. CHURCHILL'S REPLY.

In reply to Mr. McFarlane Gray and Mr. Shorey. This paper which I have just had the pleasure of reading to you deals simply with "Marine Engine Governors, beneficially considered," and does not touch the mechanical question, as I was particularly anxious to avoid bringing my own machine prominently before the meeting. It will afford me great pleasure to comply with your request to read a paper on my own Governor and the Compound Attachment with full explanatory drawings. Mr. Scobie and Mr. Thomson have referred to the difficulty in adjusting some Governors to control the engine at varying speeds. My Governor can be adjusted to control the engine at any speed without any re-arrangement or difficulty. This is a matter which will be dealt with in describing the machine itself. Speaking as regards my own machine I have never known it to fail where it has been properly fitted and kept in working order.

Digitized by Google

Digitized by Google

REGISTERED AT STATIONERS' HALL.] [ALL RIGHTS RESERVED.

# INSTITUTE OF MARINE ENGINEERS.

**SESSION, 1889-90.**

---

# ELEVENTH PAPER

(OF TRANSACTIONS),

ON

# VENTILATION

OF

# ENGINE-ROOMS AND STOKE-HOLDS

AND

# RADIATION OF HEAT

BY

MR. A. SOMMERVILLE,

(MEMBER).

**Read Jan. 31st. Discussion continued Feb. 18th, 1890.**

---

STRATFORD:

Printed by Wilson and Whitworth, Broadway.

Published at the Langtharne Rooms, 15, Broadway, Stratford, E.

Digitized by Google

Digitized by Google

THE LANGTHORNE ROOMS,
15 AND 17, BROADWAY,
STRATFORD,
ESSEX,
*February* 18*th*, 1890.

# PREFACE.

A Meeting of the Institute was held this evening, when the discussion on Mr. Sommerville's paper, read on the the 31st January, was resumed.

The Meeting on the 31st January was presided over by Mr. G. W. Manuel (Vice-President), and on the 18th February by the writer.

The Paper and Discussions which ensued will be found in the following pages.

The subject of ventilation is of the utmost importance to all concerned in the efficiency and popularity of steamships, at the same time it is of no less importance to the general health of the community. It has therefore been proposed that the various ideas suggested by the paper, and the subsequent discussions should be embodied in another paper on the subject, which Mr. D. G. Hoey (Honorary Member), who has given considerable attention to the ventilation of large halls and buildings with a good deal of success, has kindly undertaken to write, with special reference to the requirements of all the departments of steamships.

The special attention of Members is called to the notice given as to the Annual Business Meeting to be held on Saturday, 29th March, at 7.30, in the Langthorne Rooms, and to the voting papers, which should be returned not later than the 24th March.

As a desire has been expressed by many Members for copies of the Papers read previous to the date of their election, it has been decided to reprint those now out of print, if a sufficient number should apply to cover the cost of republishing at 1s. each paper. The first year of the life of the Institute closes with the date of the present paper. The first volume of the transactions may therefore be said to be completed on its publication.

It is proposed that Members should bind their own copies, and any papers wanted to complete the set, will be supplied on application as far as possible. Members who have been elected subsequent to the date of the papers they receive should contribute towards the expense of publishing them as far as convenient.

JAS. ADAMSON,
*Honorary Secretary.*

Digitized by Google

Digitized by Google

# VENTILATION

OF

# ENGINE ROOMS AND STOKE-HOLDS

## IN THE TROPICS.

The subject of Ventilation, which we are met here to discuss this evening, is of great importance and interest, not only from a hygienic point of view, but also from a practical and economical. Before proceeding to the particular branch of the subject I propose to lay before you this evening, you will perhaps allow me to say a word or two on ventilation in general. Going back to the elements, I may say the word itself is derived from the Latin "*ventus*," wind; and "*latum*," borne, or carried. It is a well known principle in nature, that air, when heated, expands, and being considerably lighter than the surrounding air, rises; a partial vacuum is thus caused, to fill which colder and denser air rushes in. This causes a continual succession of currents of air, which we denote by the term "draughts." It is the aim of the science of ventilation to provide the proper regularity and succession of these currents, so as to allow the heated and vitiated air to be replaced by a cooler and purer atmosphere.

The air in a room in the course of an evening becomes very hot and oppressive. The latter feeling is caused by an abnormal quantity of a highly-poisonous gas (carbonic acid), which is exhaled

Digitized by Google

by animals. In ordinary air this gas should be present in a very small quantity, in fact, one part out of 2,500, or about ·04° ₀. Plants possess the peculiar property of absorbing carbonic acid, and of splitting it up, retaining the carbon for their own use and restoring the oxygen to the atmosphere, thus serving a wise and beneficial purpose in respect to the purification of the atmosphere. When this gas is present in large quantities, as in large assemblies, fainting ensues, then the need for ventilation becomes obvious, and by various contrivances, aims at allowing this gas to escape, and providing continuous currents of purer air. It may be well illustrated by means of the door of a warm room, as, if a lighted candle be held at the top of the door, the flame will be seen to be bent towards the door, thus showing that the air is passing from the room to the outside; if, however, the candle be held to the bottom of the door, the flame will be distinctly seen to be bent from the door, thus showing that air is entering the room from the outside. It is absolutely requisite for good health that there should be proper ventilation. A person who has to pass a considerable portion of his life in a heated and vitiated atmosphere has always a sickly and oppressed look about him. There can be no greater contrast than that between two men, one of whom lives in a crowded city where ventilation is bad, and where carbonic acid gas is present in large quantities, and another who lives more in the open air, keeping his house at the same time as well ventilated as possible. Theatres are exceptionally difficult to ventilate, as also are large rooms or halls used for crowded gatherings, but the most difficult of all is the

## ENGINE ROOM.

No one but those engineers, firemen, and trimmers, who have been employed running up and down the Red Sea, or anywhere within the tropics at all seasons of the year, can form any idea of the unnecessary amount of suffering and endurance that have to be gone through by them in pursuit of that arduous calling, which has done so much for the prosperity of our country. Indeed, it is not too much to say, that had it not been for the ingenuity of our Marine Engineers and Architects, we could never have held the proud position we do among the nations of the world. It is very gratifying to us, as a body of Marine Engineers, to see the triumphs of our professional brethren, in producing such wonderful results of mechanical skill and ingenuity as the latest greyhounds

Digitized by Google

of the Atlantic, which seem to be able to make such fast passages, regardless of wind and weather, without a hitch, apparently; or if there has been, the engineers have had resources enough to overcome and hold on their course. A glimpse into the engine-room of one of these steamers, I may mention in passing, is given in the "Contemporary Review" of January, 1890.

As a sea-going engineer of 30 years' standing, I can well understand the calls these mighty steamers make on the resources and mechanical skill of the chief engineer, as well as the engineers on the various watches;—almost superhuman efforts are, I should think, demanded at times, yet, strange to say, those who design and construct the steamers are not so careful as they might be to see whether the engine-room is well or improperly ventilated. So long as the ship goes the guaranteed speed, the health or comfort of those on whom the success of the ship mainly depends, is too seldom thought of. I have heard it remarked that in many cases Superintendent Engineers are powerless in the matter, as if they advocate to have well-ventilated engine-rooms and stoke-holds, they are told that they are too much occupied looking after the interests of their own cloth; indeed, it was once remarked to me by the manager of a large firm of Shipbuilders, that he often felt vexed when he had been told to put the engineers' cabins anywhere, as it did not matter where they were put so long as he kept cool accommodation for the passengers; I hope such a case is not of frequent occurrence. During my varied experience as a sea-going engineer, I have been employed on steamers built by a great many different firms, and I have always found that a hot engine-room is synonymous with a hot ship, and those who are interested in the subject of providing accommodation for passengers should bear this in mind. There seems to be a prevailing idea abroad that the more the heat is confined in the engine-room and stoke-hold, the cooler the ships are in the passenger accommodation, and it is presumed to be better that the few should suffer than the many; such an idea is a great mistake, as I have proved over and over again by experience. One well known builder, whose ships up to a few years ago were always considered the most comfortable and cool ships trading to the East, for both passengers and anyone sailing in them, had the engine-rooms open to the main or passenger decks, similar to sketch No. 1. Their more recent ships, I have observed, are somewhat different in style, the engine-room being boxed in, as per sketch No. 3, and I am led to believe by those who have sailed in them, that they are the hottest ships of their class

Digitized by Google

both in passenger accommodation and engine-room, although they are fitted with large exhausting engines, which work night and day, exhausting the hot air from the passenger accommodation. In these days of keen competition, when passengers have a variety of steamers to choose from, it is but natural that in their choice they should be guided by either their own experience or that of a friend, especially in so important a matter as ventilation, or the want of it, on which indeed their good or ill for the time being depends; we may rest assured, therefore, that with interchange of experiences and expressions of opinion, judgment is passed, and the popularity or otherwise of a steamer is determined. It seems to me surprising, and I do not think I am wrong in saying that the majority present will endorse the opinion, that such an important matter as the best method of ventilating engine-rooms and stoke-holds, and along with them, the passenger accommodation, has not received more attention from a pecuniary as well as from a humanitarian point of view. Now that there are so many mechanical appliances, cheap and effective, for exhausting hot air, or what is equivalent, forcing pure air into tunnels, mines, large buildings, &c., it would not cost much to have exhausters fitted up to draw the hot air from the hottest part of the engine-room, and the exhaust led by a pipe into the hottest part of the stoke-hold, so arranged that the discharge could be regulated at will, according to circumstances. The firemen would thus reap an advantage, and the engineers on watch would have a wholesome engine-room to do their duty in, and with a similar or other arrangement fitted to ventilate the passenger department, much of the discomfort which at present is experienced in many steamers would be obviated entirely—in regard to the special feature referred to in this paper—or at least to a very considerable extent. I apprehend that it would be worth the endeavour of those whose duty is in the direction of seeing that the passenger accommodation is made as attractive as possible, to give very special attention to the ventilation, as I need not point out that personal comfort enjoyed by passengers tends to popularise a steamer. The exhauster or fan blast I have alluded to could be driven by a rope from a pulley fitted on the crank shaft (in the same way that Silver's governor was originally driven) with little or no expense to keep it in repair. I have already observed that in most cases a hot engine-room tends to make the neighbourhood of the engine-room and stoke-hold all round also hot, on the other hand a well ventilated engine-room makes a cool ship, and in connection with this, I would say that all steam pipes, cylinder covers, and cylinders, should be properly covered with good non-conducting

Digitized by Google

materials, of which there are many in the market—each claiming to be the best. In my experience I have found Keenan's "papier maché" to be very useful in reducing the temperature and the stuffiness of the engine-room, but as I have not had an opportunity of trying many non-conducting substances, I am unable to give any opinion on the respective merits of them all. In the course of my enquiries on the subject, I have found that the concensus of opinion is in favour of my own experience that Keenan's stands high as an efficient non-conductor. I have made several experiments—at various temperatures—with the common soot from the boiler tubes, and I found, on comparing it with Keenan's, that it is a very good non-conductor of heat, the soot only varying on an average three degrees hotter than the cement referred to. Here is a cheap and always handy non-conductor, which can be used in various ways—such as filling up the cylinder tops and covers usually fitted with *false* covers—without any expense, and there is no chance of it taking fire, as all the combustible gases have been burnt out of it and left a perfectly reliable non-conducting substance. I shall endeavour to show to you the advantage it is to ship-owners, as well as to the health and comfort of engineers, to have the engines well covered in with a non-conducting material, not only in point of economy, but efficiency, especially when there is such a vast mass of machinery crowded into the least possible space—as is generally the case in the most modern steamers. I have become cognisant of several steamers, which, in consequence of the want of ventilation and undue heat and consequent discomfort, or,—I may not be putting it too strong when I say misery—endured by the engine-room staff and crew, the utmost difficulty has been experienced in obtaining even *native* crews to remain more than one voyage, and when it became known amongst the men that the conditions under which they were expected to discharge their duties were so unfavourable to health and comfort, only an inferior class of men could be obtained. In more than one of the cases I have referred to, steam to drive the ship the speed that was wanted could not be maintained, as the men became exhausted, and could not stand up to their work on account of the heat of the engine-room and stoke-hold; one after another was on the doctor's list. Crews had to be picked up the best way possible, and it became a case of having to take anyone who chose to offer; the ships had earned a bad name for being so hot. Apart from the want of ventilation and the heat, no fault seems to have been found by the men, the treatment they received otherwise being, I have reason to believe, good.

Digitized by Google

Every sea-going engineer of experience knows there is always a deal of work to be done in every ship on her maiden voyage, and we can sympathise with a Chief Engineer who, in addition to his other anxieties, has to contend with difficulties over which he has no control, and due to want of thought in the construction or designing of the whole general arrangement. Whether the facts were brought, during construction, under the notice of those in charge, or by them to the notice of the builders, I am unable to say, but considerable expense was entailed in several of the cases I have referred to, before the engine-rooms and stoke-holds were made habitable. In addition to this expense may be added that involved in the changing of crews, men off duty on account of illness, and the great disadvantage of having frequently the projected work in the engine room, in respect to the overhauling of the machinery in port, almost at a standstill, between the discharging of one crew and obtaining another. Speaking generally, the stoke-holds were fairly cool in these steamers, it was the heat from the engine-room that caused it to be so hot in the stoke-holds.

Sketches Nos. 2 and 3 represent the class of boxed-up engine-room, which is the arrangement I have been alluding to, and the improvements made were the removal of what tended to impede the escape of the hot gases, and cover up the most exposed steam pipes with felt and canvas and non-conducting substances as found most convenient for the purpose. It was surprising to hear what an improvement was effected in the engine-room and stoke-hold ventilation by a few slight alterations, and the covering of all the exposed portions of the machinery which were likely to increase the temperature of the engine room. In several cases, however, the alterations were considerable, and carried out at considerable expense, such as opening up the otherwise covered-in engine room, the fitting of large ventilators, and cutting away of a coal bunker pocket in the engine room. In bringing such facts forward, my object is to show the necessity for ventilating a subject which has been admittedly very much neglected. It has fallen to my lot to introduce the question in the hope that the outcome will be a good discussion, and an expression of opinion from members present, which will result in good, not only to SEA-GOING ENGINEERS, but the TRAVELLING PUBLIC, and, of necessity, the SHIPOWNERS who see the benefits derived from adopting the best methods and arrangements conducive to comfort.

I cannot claim to lay before you an original system for ventilation or removal of heat, I can tell you, however, that I have

Digitized by Google

found a degree of comfort is gained by the filling up of all hot-air spaces about the engines with soot and saw-dust, covering all steam pipes, even the small auxiliary steam pipes, with non-conducting material.

When a steamer is new we usually find that the larger pipes are covered with a non-conductor, while the smaller are left bare, so that there is a considerable area of hot surface exposed to the atmosphere of the engine room, and acting injuriously in two ways: first in heating up the engine room; second in radiating the heat and liquifying the steam. I have endeavoured in the steamers in which I have had charge, to cover up portions of the engines and piping from voyage to voyage, as time and circumstances permitted, and I do not doubt but the coal consumption was very materially reduced by the process. By a comparison I have made, taking the speed into account and the voyages, as near as may be the saving in fuel appears to be not short of eight per cent.; thus it will be seen that, by expending a small amount of money and a little thought and attention, a more comfortable engine-room and stoke-hold is secured and a considerable saving in fuel.

I shall briefly refer to another steamer which I happen to know a little about, indeed, I made a passage from Suez to Calcutta in her some years ago, she was one of the first ships fitted with screw tandem-compound-engines employed to ply in Indian seas, and had all the improvements of her time, indeed she was a mass of machinery from stem to stern, and the design of the engines and workmanship has not since been much improved upon, although it is nearly 30 years ago since she started on her first voyage. Too much attention seems to have been paid to minor details, and the primary cause of her failure was insufficent boiler power and bad ventilation. The engine room was as No. 3 sketch, or "boxed in" type, it was found when she was in the Red Sea, or within the tropics there was little or no draught in the stoke-holds, and it was impossible to keep steam, and instead of there being a saving of 30 per cent. in fuel, as was expected and afterwards found to be the case with ordinary compound engines over the common jet condenser type, this vessel's consumption was somewhat greater than ships of the same tonnage fitted with the old style of engines.

The axioms—may I say—"A hot engine-room makes a hot ship," was exemplified here. The main or passenger deck was so

Digitized by Google

hot that a great many passengers could not live even in those cabins which, from their position, should have been looked upon as moderately cool. In consequence of the complaints, the whole arrangement was considered with a view to remedy the defects and improve the condition of things, it was decided that whatever *could* be done in reason, so as to ventilate the passenger accommodation, *should* be done. The then Resident Engineer suggested, that, as they never had any complaints about the ventilation in the older style of ships, if the bulkhead round the engine room was removed and a hand-rail substituted, as per sketch No. 1, it would improve the ventilation of the engine room, and the passenger accommodation also; this was done, and as far as I can learn, there never was a single complaint made by the passengers afterwards. The ship made a somewhat faster passage with less coals, and I can say, from personal experience, she was a fairly cool ship afterwards.

## LOSS OF FUEL BY RADIATION.

A few years ago I happened to have a conversation with a gentleman holding a very high position in steam shipping in the city, who asked me quite casually "Do you find there is any difference in the consumption of coal between London and Port Said and Suez, and any of the Indian Ports;" I said "No I cannot say it ever occurred to me to go into the matter, but I should say the consumption of coal would be less on this side of Suez, on these grounds, that we have the advantage of getting freshly-worked coals and better measure, whereas on the Indian side of Suez, coals have to be shipped out to the coal stations, so that with landing and re-shipping them there must be a considerable percentage of loss, as well as the well-known loss that accrues from coal being exposed to a tropical atmosphere for any length of time, it is said coal loses as much as 20 to 25 per cent. of its steaming quality." "Well, he said, we find that the average consumption is nearly two tons per day less on the Indian side, notwithstanding all that you have said, and which we are aware is, to a certain extent, correct." No more was said at the time, but I have often pondered over the question, trying to trace the reasons for the increased consumption on this side of Suez, as we can hardly suppose that the observed results thus referred to, as indicating increased consumption on this side of the canal, were due to coincidence merely. In order to verify or disprove by experiment

Digitized by Google

the truth of what had been remarked to me, while employed in a steamer which was fitted with all the latest improvements, and, amongst others, with (WEIR's) automatic feed pumps, which, on account of their slow regular motion seldom or never choke themselves or stop working, as the plunger feed pumps nearly always do, when using a high pressure of steam and high temperature of feed water. It occurred to me, by carefully measuring the quantity of water required to make up all losses, with such reliable feed pumps, that I might arrive at some conclusion as to the amount of water that was actually lost per day through radiation, leaky glands, pantry, galleys, &c. Taking the ordinary working of the engine at different speeds, I found, to my surprise, I required nearly eight tons of fresh water per day between London and Port Said, and about six tons between Suez and Calcutta; this was a result which gave me a deal of thought as to how to reduce the loss. The ship, unfortunately, was not fitted with an evaporator. There was no other way of making up the loss except taking water in at different ports, and condensing by the donkey boiler, which latter is a most expensive way of making fresh water on board ship. It was out of the question for me to use sea water to make up the loss. I did the best I could under the circumstances, and with my Superior's advice, filled up the cylinder covers with sawdust and the distance pieces between the cylinders with soot from the tubes and fine ashes mixed, which I found a very good non-conductor of heat. I may mention that the distance blocks or pieces between the cylinders were 7 feet long, 2 feet square, and of course they radiated an immense amount of heat in the 24 hours.

When I measured the quantity of water required afterwards, I was agreeably surprised to find only 4 tons per day on the Indian side and about 6 tons on this side of Suez, were required. As these were very encouraging results, I thought it advisable to try what could be done with a view to obtaining a still further improvement and saving. As soon as practicable, a supply of the non-conducting material already referred to was obtained, with which all exposed parts of the engines and boilers, steam pipes, &c., in short, all portions likely to radiate heat that could be got at, were covered with non-conducting substance of one kind or another and the results were most satisfactory. In the first place the engine room, even in the Red Sea in the hot season, was made comparatively cool, with no complaints either from the firemen or engineers, and only 2 tons of water per day were required to make up all losses on the Indian

Digitized by Google

side and 4 tons per day on this side of Suez, of course with much less fuel to do the same work as formerly. Those facts speak for themselves, and it will thus be seen how great is the saving in having all the exposed parts of the machinery covered in as far as possible with a non-conducting substance of some kind, and this course I would suggest to those who are at all troubled with hot engine-rooms. Adopting this course, very much of the trouble and disadvantages which accompany a superfluity of heat will be obviated, and a recompense will be added in an improvement in the health of the long-suffering engine-room staff.

I have had several discussions on the losses of heat and water through the radiation that takes place in all steam ships at sea, and all engineers, without exception, maintain that there is only a loss of power or heat, but no perceptible loss of water. I consider this is a wrong conclusion. If there is no loss of water through radiation, can anyone explain how much less water was required to make up the losses than formerly, in the case which has been detailed? To my mind it can only be accounted for by what was done to prevent the loss of heat. Iron being a porous good conductor of heat, and, as we are all aware, steam being merely a gas until it mixes with the atmosphere, it seems to me that the boiler steam or gas seeks its way through the porous iron in the shape of heat, consequently a loss of gas means a loss of water. If the boiler gas did not find its way through the various metals they would never become hot or warm at the external surfaces. I have not been able to find a scientific work that gives adequate practical solution of the loss of heat at the various working pressures of the present time, and shall be glad to obtain the name of a reliable book that would throw any practical light on the matter. All the various experiments which I have made from time to time, lead me to believe that where there is a loss of heat there is a corresponding loss of water in the boilers. Let us suppose a cast iron cylinder, say 1 inch thick, to be filled ⅔ with water, let it be accurately weighed, and then let the steam be raised to, says 160 pounds pressure, and kept up for a week night and day, then let it be cooled down to its original temperature and again weighed, it seems to me we should find it much lighter than it was originally. Unfortunately I have not the means at present to carry out accurate experiments of this sort, it requires finely graduated scales to arrive at a correct per-centage of the loss of weight that takes place, too fine, I fear, to be done on board a ship at sea.

Digitized by Google

I hope, when the all-important question of the best means of ventilating engine-rooms of ships of the present day is discussed, that you will be able to suggest cheap and efficient means that will do away with the unneccessary suffering our brother engineers have to go through in the tropics, so that they may have some comfort in performing their arduous duties. We cannot in reason feel otherwise than regretful or vexed, when it becomes necessary to call the junior engineers from the hot quarters they have to sleep in, as a rule, to work, or even to take their watches in still hotter engine-rooms, and the question has been before me many times; what would be the result if the engineers on watch were to become exhausted? Now that ships have to be driven to their utmost power and are fitted with so much machinery (for deck and saloon comforts and conveniences) to be looked after, I shudder at what might be the consequence to the ship and everyone on board, in the event of the engineers losing energy at a moment of the utmost importance —which may arise at any time—and result in the loss of one of those magnificent ships, a loss which may be called nothing short of a national calamity, while the risk to human life is also great.

## ILLUSTRATION OF HEAT LOST THROUGH RADIATION.

I have taken the average temperatures of the engine-room and stoke-hold of a ship, indicating about 4,000 h.p., carrying 150 lbs. of steam, and fitted with all the latest improvements in the shape of Electric Engines, Refrigerators, Weir's Patent Feed Pumps, and many other engines for various purposes generally now found in first-class Mail Steamers. The engine-room was 37 feet long and 38 feet wide, depth from top of cylinder cover 29 feet, contents about 40,774 c. feet; roughly speaking, the machinery and connections took, say one-half, or 20,387 cub. feet of that space. The average temperature for several days in the Tropics in the month of November, was 97·3° on the bottom platform, and around the top of the cylinders 105·83° sea water 84°; average temperature of atmosphere at night, 80°; daytime, 85°. By closing the skylights and engine room doors for 2 hours, the temperature rose all round 11°. It follows, I should say, that when the temperature rose 11° in 2 hours, that it required 20,387 cubic feet of air, or ½ cubical contents of the engine-room to carry off the heat every two hours, to keep the average temperature down to 101°, or the same as it was before the skylights and doors were shut. I naturally came to the conclusion, when the temperature of the atmosphere and sea

Digitized by Google

fell to 44° and 48° respectively—the average temperature of the English Channel from Ushant to Gravesend in the month of January—that the corresponding volume of heat that was lost by the difference of temperature between the Tropics and English Channel by radiation accounted for the extra fuel consumed, as well as the extra amount of feed-water required to make up all loss, as referred to in the previous part of this paper. I might put it another way; I often found coming up the English Channel, in the winter months against a strong head wind, and the stoke-hold and engine-room ventilator hoods placed head to wind, that the consumption of coals increased very much without the corresponding increase of steam, due to the increased consumption of coal; by turning the hoods of the ventilators back to wind, we kept good steam with little or no increase in the consumption of coal, this was due to the fact that all the air required for the combustion of the coal in the furnaces was drawn from the heated air in the engine-room. This shows that the lower the temperature of the atmosphere, the more loss of heat by radiation, and consequently the greater the loss of feed-water and fuel. Thus it will be seen that we cannot be too particular in preventing the enormous losses of fuel and water through radiation. It may be apparently expensive to those who rule the exchequer, to prevent the loss of heat by applying the best non-conducters of the day, but I can assure them that it will be a tenfold saving in every way, not only in fuel, but in repairs, stores, &c., and the machinery will be kept in much better working order, and less discontent among their engineers and firemen. I can safely say when engineers have a comfortable engine-room to work in, they take a pride in their work.

Before closing, I may remark, that my attention has been called by our Honorary Secretary to an article which appeared in "Fair play," of date January 3rd, 1890, entitled "Temperature of Stoke-holes," and written, I understand, by one of our members. The article in question deals with a branch of the subject to which I have called attention, and is well worthy of perusal and study. I trust that those who are interested directly or indirectly, and who have power to remedy matters, will consider that human endurance has limits, and they have been reached in many of the engine-rooms and stoke-holds of the present day, and let us hope that more attention will be paid to the whole subject of a reduction of temperature in the engine-room and stoke-holds, with better ventilation throughout the steamer, and greater comfort for both engineers and firemen, so that they may be able to do their work efficiently and have a greater interest in it.

Digitized by Google

## CHAIRMAN'S REMARKS.

(Mr. G. W. Manuel).

The subject brought before our notice this evening is of great importance, and should be productive of considerable discussion. I am pleased to preside to-night, and to have heard the Paper which has been prepared by Mr. Sommerville, who deserves credit for being the first of our sea-going members to face the difficulties attached to writing a Paper, and I hope the example he has set will be followed by many more. I will now call upon Mr. Ruthven to read the extract from *Fairplay*, as Mr. Sommerville, although present, is suffering from a bad cold.

---

## TEMPERATURE OF STOKEHOLES.

(Reprinted from *Fairplay*, Jan. 3rd, 1890.)

The tendency towards increased rates of combustion and higher boiler pressures, is not calculated to enhance the prospects of the stokers who have to maintain them, unless more efficient means are provided to prevent the increased temperature of the boiler and its fittings from affecting them. The adoption of triple engines added about 50° Fah. to the temperature of the boiler, yet in very few instances has any further provision been made to intercept the radiant heat from the front of the boilers into the stoke-holes than formerly obtained with boilers working at one-fourth the pressure; in fact, better designed smoke-box doors were fitted on many of the low pressure boilers in steamers engaged in the home trade thirty years ago, than are often fitted to-day in steamers trading to the

tropics. Perhaps many people would be astonished if an annual return of the number of engineers and firemen trading to the East and West Indies who die, or undergo medical treatment, was made public, and it would probably be found that fire can claim as many victims as water among the crews of merchant steamers, though the agency of the former is not often so directly traceable as that of the latter in producing its results With the most perfect system of ventilation it should not be forgotten that a piece of meat—or a man—may be roasted though entirely surrounded by an ice-cold atmosphere, if no provision is made to intercept the radiant heat which may be directed against it—or him. There are very few stoke-holes which would not be improved by the freer use of asbestos lagging, or by fitting more baffle plates, additional to the one sometimes fitted to the outside of smoke-box doors and up-takes. We are aware that in the majority of cases plates of this description are fitted outside the up-take, and inside the smoke-box doors, but they are often omitted from the side of the door next the stokehole for the sake of giving a neat finish to the front of the boiler. A little consideration of the matter will show us that while an inside baffle plate is necessary to protect the door from the flames that would otherwise impinge against it with forced fires, it cannot protect the fireman from the radiant heat as efficiently as an outside plate spaced about one inch off the door, while the specific gravity of the air in this space induces a constant circulation tending to cool the stoke-hole; a layer of silicate cotton, or asbestos, may be attached to this plate to increase its efficiency. With high rates of combustion this is especially necessary, and a red-hot smoke-box door or up-take should never be regarded as a necessary evil under any circumstances. In the majority of cases where forced draught is employed with an open stoke-hole, the funnel may be advantageously utilized to promote the ventilation by making it annular, and leading pipes from those parts of the stoke-hole where the heated air is likely to be "pocketed," to the central space in the funnel where the issuing gases surrounding the ventilator would, by heating it, make it more effective. This would necessitate no alteration in the size of the funnels, as the proportions necessary to impart a good appearance to the ship is generally greater than is dictated by the exigencies of forced draught. When heated air is supplied to the fires—a condition which will probably be general in the near future—care should be taken to render the passage from the heating-chamber to the fires air-tight; if this casing is imperfectly fitted, and hot air permitted to pass into the stoke-hole instead of the furnaces, it soon makes itself apparent by increasing the temperature, to the discomfort of the firemen. We have known this to occur in ships fitted by some of the best engineers in the country, but who do not seem to have yet realised the great importance of reducing the funnel temperature by heating the air

Digitized by Google

and have consequently displayed less care in fitting the apparatus than the benefit derivable from it warrants; the result has been to discredit the system instead of those who have misapplied it. It is a mistake to assume that the use of hot air necessarily involves a higher stokehole temperature, unless the air is heated beyond the temperature of the boiler; on the contrary, the air casing tends to keep the stokehole cool by intercepting and utilising the radiant heat from the front of the boiler shell, and, in the interest of ship-owners and stokers alike, we would suggest the desirability of testing the tightness of this casing by filling it with water before going to sea with it.

---

## MR. F. W. SHOREY'S REMARKS.

(See Sketch A.)

It is with pleasure I have listened to Mr. Sommerville's Paper, which must have taken much time and trouble to write, as well as to collect the information given.

Most of us here know what it is to be out in the Tropics when there is scarcely a breath of air, and how uncomfortable it is to be down in the engine-room at such times.

Now Mr. Sommerville has explained these things very fully; but has not introduced to us any particular method of obviating this want of ventilation, but has only suggested that all steam pipes and surfaces exposed should be covered with some non-conducting material to prevent radiation.

I am somewhat disappointed that he did not give us his idea of some means of removing these unpleasantnesses in the engine-room and stoke-hold.

Last week I was in a factory where they were making a patent ventilating apparatus for steamers and public buildings, and was informed that the North German Lloyd's and other steamers, and several theatres were fitted with it, and that it suits the purpose intended very well. Considering it a neat and simple arrangement I made a sketch, which I now place before you.

You will see from the sketch that it is a gunmetal shell, through the centre of which is a spindle; in the shell rests a nozzle, which is kept in its place by the spring shown on the spindle; the nut at the top of the spindle is for adjusting the lift of nozzle, so as to regulate the quantity of air required to be forced through.

Any number of these ventilating nozzles can be used, as they are attached to a pipe through which the pure air is forced by a

Digitized by Google

pump at a pressure varying from three to five pounds pressure per square inch.

You will see from the sketch that it is a simple arrangement, and could be fitted to steamers at a very little cost.

---

## MR. HAWTHORN'S REMARKS.

I have listened very attentively to the valuable paper that has just been read with a deal of satisfaction, and it appears to me that, although many improvements have been made in the design of Marine Engines and the manner of working them, we are very conservative in the matter of ventilation, and I think the time has arrived for Engineers to take the matter up. I have had experience of one kind only of mechanical ventilation, and the ship I refer to is the "*Assyrian Monarch.*" During my service on board that ship, as Junior Engineer, we had a fan on the upper platform, driven by an ordinary belt from the after coupling of the shaft. This fan was there for ventilating the cattle deck during bad weather, and when the hatches had to be closed. But under similar conditions *no provision* was made for the engine-room or stokehold. It also appears to me that the time has arrived to do away with those great unseemely cowls stuck about the funnel casing, and which must offer a great resistance to the ship's way when at great speed. I would suggest that some appliance be adopted, which would induce an up-current of air, such as we see on the tops of chimneys of our houses, and which may be made to work on the principle of the "Humbee" Jet, the speed of the ship through the water would give sufficient velocity to a current of air across the top of the up-tube that would induce the hot air to rise more freely.

---

## MR. W. C. ROBERTS' REMARKS.

(See Sketch B.)

There is one form of ventilator which I think merits reference and which I have found useful for confined spaces such as holds, &c. I will give you a rough sketch of it. I may say that in one or two of our large steamers the engineers have fitted up punkahs over the starting platform and find great benefit therefrom. Although considered a kind of luxury at sea, and only fitted to dining saloons, engineers are quite entitled to the comfort derived from their use. Made portable they can be put up or taken down at will.

Digitized by Google

## MR. BRUCE'S REMARKS.

This paper is one of considerable interest, from the nature of the subject with which it deals, and it is important on account of the practical and reasonable manner in which it treats the points touched upon. It is undoubtedly in the interests of shipowners, that those in charge of the propelling machinery should be able to discharge their onerous duties with the least possible inconvenience from badly ventilated engine and boiler compartments; and seeing that discomfort from such a cause as this is a matter which a little care and forethought while *designing* any given ship may be dealt with without any material increase of first cost, it is remarkable that many vessels which may be suitable for trading in temperate zones are altogether unfit to work in, when sent to trade in hotter quarters of the globe.

As to the best means to adopt in order that engine and boiler-rooms may be made more comfortable, there is no doubt plenty of room for discussion. I think, however, that while the author has treated the engine-room from the point of view that it should be exhausted of warm air from the top, my view would be that the warm air of the engine-room and the spaces above and around the boilers, as far as possible, should be taken hold of by a fan, suitably placed, and discharged into the ashpits in order to assist combustion of fuel; the air, in its progress after leaving the fan, might have its temperature further augmented by heat from the gases escaping from the combustion chambers and smoke-boxes.

Instead of one fan only being used two or more may be employed, with discharges common to one receiver, one engine being common to the two or more fans, and with properly placed "downcast" tubes of ample size a sufficient quantity of cool *fresh* air would be supplied.

Regarding the remarks of the author on Radiation, there can be no question of the importance to steam users generally of every discovery that may be made of means whereby the losses from this cause may be minimised. I do not know whether all that can be learned about the best means to be employed in order to reduce losses from this cause, has been learned, but being one who believes that the experience of members of this Institution qualifies them to handle such a subject, as well as kindred subjects of vital importance to the Marine Engine, I am in hope that ere long some investigation committees may be formed, in order that the fullest possible information may be collected and arranged at the disposal of the Institute, so that "those who go down to the sea in ships" may do so in greater safety and comfort.

Digitized by Google

## MR. J. H. THOMSON'S REMARKS.

A short time before the death of Mr. Green (whose name is so well-known in connection with the subject of ventilation) I had the pleasure of meeting him on several occasions, and also of seeing his system in operation at his offices in Queen Victoria Street, and he frequently said that all the patent nozzles and fans, &c., for removing the vitiated air would be useless unless there was provision made for a fresh supply of pure air to take its place, and he looked upon the means of collecting and distributing the fresh air equally as important with his patent nozzles and their application.

As the discussion is to be continued on another evening I would like to mention that there are several works in the library which treat on the subjects of ventilation and radiation, and those wishing to take part in the discussion may find something in them that may be useful and assist us in throwing some light on the subject which may be a means of improving the comfort of all on board steamships.

---

## MR. J. McF. GRAY'S REMARKS.

The subject of this paper is of great importance to the members of this Institute and the author has dealt with it in a manner deserving the highest praise. The earnest common sense with which he represents the engineers' high temperature grievance must be appreciated by the cool judgment of any reasonable owner. Certain callings have their natural discomforts which can never be entirely removed, as those of the coal miner and the soldier, but with the engineer, what is complained of is different, for nature invites the owner to remove the grievance, and the author of the paper assures him that he will save coal by doing so. The great increase of temperature of the steam now employed has, in recent years, been most profitable to the owners, and there is no reason why every proper means should not be taken to prevent such improvements becoming intolerable to the engineers. The instances in which engineers and firemen have dropped down at sea, the victims of heat apoplexy, or have through exposure to high temperatures, in despair, committed suicide are reported to be alarmingly on the increase. The very temperate representation of this hardship by the author of this paper is, therefore, likely to lead to a good result. The plan described, of a central ventilating pipe in the funnel, will, no doubt, be to some extent an improvement. The best arrangement must be where all the air for the furnaces is taken through the stoke-hold. Where heated forced draught is employed the fans ought to take a great part if not all

of the supply from the stoke-hold near the floor. The efficiency of such a pipe in the funnel is less in respect to draught than the funnel itself because the air is not at the same high temperature for the whole length of the pipe.

The author raises a question about the difference of make up water in hot and in cold climates. He explains how that difference arises as he thinks, but I am afraid his views will not, on this point, be accepted. That steam should be continually finding its way through the solid metal of boiler shells and through the lagging along with the heat radiating from the external surfaces is quite a new idea, and, so far as I know, it does not occur. The author cannot, however, be said to be stating what is absolutely unreasonable to imagine, because many solid metals are traversed by different gases. As illustrating the permeability of cast iron I remind you that the hermetically sealed cored-out spaces in steam pistons and cylinder covers, after being exposed for some years to steam, become filled with inflammable gas. When these have been afterwards bored into for some reason, and a light brought near the hole, explosions have occurred, and in one case within my personal knowledge the workman lost his sight in this way. Whatever that gas is it must have come through at least part of the thickness of the iron. I state this that you may not expose yourselves unwittingly to similar explosions and—to minimise the abnormal character of the statement in the paper. Probably further experiments may show that the difference observed by the author is not generally confirmed, or that it may be otherwise accounted for.

---

## MR. SOMMERVILLE'S CLOSING REMARKS.

Mr. Shorey has expressed his surprise that I did not mention any particular mechanical apparatus for ventilating engine rooms.

I merely mentioned mechanical appliances generally, as there are so many in the market, each claiming to be the best, that it is impossible for me to say which has the palm. Some engineers seem to think that it is best to force air into engine rooms. Others are of opinion that to exhaust the air from the hottest part and discharge it into the stoke-hold and induce a draught that way is best.

Which way is the best? I think ought to be decided by those who have the choice of the various mechanical appliances, and who have taken the opinions of a number of experienced

Digitized by Google

engineers trading to the Tropics at all seasons of the year and considered them carefully with the plans before them.

Mr. Hawthorn has spoken very truly when he says that more attention has been paid to the ventilation of cattle accommodation on steamships than has been paid to engine rooms and stoke-holds. I have heard of various plans being tried with more or less success in ventilating cattle accommodation, but I am sorry to say that I have never seen or heard of any mechanical appliances being tried to ventilate Engine-Rooms and Stoke-Holds. The large and unseemly ventilators and cowls which are fitted to ships Mr. Hawthorn thinks might be replaced by some kind of automatic ventilator. There are a number of these automatic ventilators that might be used to advantage and ensure a continuous up-draught for engine rooms and stoke-holds at all times.

I have seen a good many appliances of the description he mentions tried, and have found them very effective while there is wind; but, unfortunately, when most required, such as in the Red Sea in the hot season, and when there is not a breath of wind, they stop work. The very fact of them stopping work when most required shows we want a reliable appliance driven by the engines, so that we can be sure of them working at all times.

The Ventilator which Mr. Roberts has sketched is effective only when there is a head-wind, or a very great difference in the temperature of the holds and the atmosphere; how much I am not prepared to say, but in a light, fair wind, when there is no draught caused by the ship, I am afraid the plan would be of little service.

Mr. Bruce's remarks are very good indeed, and I have no doubt that the plans he suggests, if carried out, would add very much to the comfort and health of the engine-room staff. I shall not fail, should ever I have an opportunity, to take advantage of his suggestions.

Mr. McFarlane Gray has questioned why there should be such a loss of water daily, and thinks I should have entered more into details concerning this loss. He has given us, to my mind, a good, practical and also scientific explanation himself, namely, cast-iron being porous, the heat finds its way through the pores to the surrounding atmosphere; it follows there must be a loss of water in the boilers, according to the theory I have advanced in order to explain this loss, and I hold to it until I can obtain another explanation.

Mr. Thompson has advised us and others to read scientific books on radiation, and the loss that occurs through condensation. There are several, he says, of these volumes in the Library

Digitized by Google

belonging to this Institute. As nearly all the members are sea-going engineers, I have no doubt they are only too glad to have as many hours as possible of the short time they do have at home, with their wives and families, rather than come to the Reading Room and read highly scientific works, while to buy them is beyond the reach of a great many of us. Therefore, I think it would be a good plan to have a Circulating Library connected with this Institute, so that we could take books to sea with us.

Digitized by Google

# VENTILATION
OF
# ENGINE-ROOMS & STOKE-HOLDS
AND
# RADIATION OF HEAT.

ADJOURNED DISCUSSION—TUESDAY, FEBRUARY 18TH, 1890

## CHAIRMAN'S OPENING REMARKS.

(MR. JAS. ADAMSON.)

In order to gather together the various ideas in the paper read on 31st January with a view to resume the discussion on the Ventilation of, and the Radiation of Heat in, the Engine Room and Stoke-hold, I will briefly refer to several noteworthy points from which profitable remarks may be started. The paper itself has an intrinsic value, but it possesses a greater value as initiating a discussion which I hope will be productive of benefit to us all.

The presence of Carbonic Acid Gas in large quantities was referred to as more or less noxious to the human frame; its poisonous nature is well known to dwellers in cities with their crowded assemblies, and to dwellers in the country from its direful effects in mines as Choke Damp—$CO_2$. The method used in ventilating mines I need not remark upon except to say that we may occasionally see it illustrated, much to the discomfort of the engineers and detriment of the machinery, when the engine room is hotter than the stoke-hold, and in addition is boxed in and narrowed at the top to form a funnel, so to speak, by which the partly heated air from the stoke-hold obtains vent, carrying with it loose particles of dust to find a lodgment in the oil cups and brasses, bringing about the result of a hot bearing with its consequent worry, anxiety, and fatigue to the Engineers.

It is, therefore, important that the functions of the funnel proper should not be usurped by the engine room skylight—examples of this may have been observed by some members present.

In addition to Carbonic Acid Gas or Carbon Dioxide, reference may be made to the presence of Bilge Gas, which, unlike Carbonic Acid Gas, has a very ungrateful odour, and while the one is frequently used to add to the pleasures of the table the other certainly interferes with both the appetite and the digestion.

It is of moment to keep the bilges sweet and clean by means of disinfectants and *elbow grease.*

The accommodation provided for engineers in very many steamers is out of all keeping with the nature of the duties they are called upon to discharge; this is beyond question.

The slight saving in first cost and the prospective earning power of what is thus saved is generally purchased at very much above the true market value. Not only is there want of ventilation but want of light, both in respect to the accommodation itself and those who are responsible for the policy which designs it. The more important lines of steamers cannot be taxed with this short-sightedness; still it rules in lines of lesser note, leading to frequent changing of engineers and the ruin of much valuable machinery for want of that interest and pride which every true engineer takes in the work committed to his watchful care.

It stands to reason that a man whose personal comfort receives some attention and thought from his employer will endeavour to show his appreciation by making every effort to crown with success the ventures of that employer. The contrary proposition does not always follow, but, I may say, it tends to follow in inverse ratio to the strength of moral courage added to high ideal of duty possessed by each one serving against removable burdens imposed by those in authority.

Regarding the ordinary style of ventilator fitted in the Stokeholds, one very objectionable feature lies in the injury frequently done to the furnaces, combustion chambers, and tube ends when cleaning fires with the cowls turned to face the wind. The damage done to the boilers when under steam by allowing cold air to enter the furnaces by the open doorway was specially referred to at a previous discussion, and I think it of sufficient importance to mention it again.

One or other of the arrangements fitted to admit of turning the cowls from the Stoke-hold flooring plates, and orders carried out to the effect that the cowls be turned back to wind, when cleaning fires or sweeping tubes, would obviate the risk of damage.

It occasionally happens that the ventilators come down into the stoke-hold within a short distance of one of the furnaces or the

Digitized by Google

wing of the boiler; the distance to the bulkhead being only sufficient for firing purposes, it will thus readily be seen that the rush of cold air must be hurtful to the heated plates, especially at the landings, in such cases.

I have seen records of a Stoke-hold such as this where the temperature between the ventilators has been about 100° and on either side about 150°.

The small boxed-in style of engine room skylight was strongly condemned in the paper as being a conserver of heat affecting both passenger and cabin accommodation and engine room, and taking the experience of Mr. Sommerville, the cutting away of the bulkhead around the engine room and leaving it open to the alley-way made a considerable improvement; the passenger accommodation being made more comfortable, due to the heat from the engine room finding vent and drawing the cooler but vitiated air from the alleyways and inducing a current from the outside atmosphere.

The bulkhead plating in the neighbourhood of the engine room and stoke-hold becomes hot in itself and also a conductor of heat; it is thus important that means should be taken to keep it as cool as possible by means of a current of air, and have a good clear exit for the heat.

The fan system of ventilation was referred to, either used as an exhauster or blower. The disadvantage of having a fan driven off the main engine shaft is that while in port, with the main engine, stopped, the system is at a standstill, but not the need for ventilation and a cool atmosphere.

There are several different plans for ventilating various parts of a steamer by means of fans arranged to discharge into the main funnel, and so give, in a sense, forced or induced draught at the same time.

Other systems, again, aim at drawing the vitiated air from the cabins and saloons by means of pipes led through the ship and terminating at the funnel or funnel casing, the extreme heat at the root being taken advantage of to induce a current. Some advocate the outlet being led into the funnel itself, others advocate the outlet being led into the annular space around the funnel. I have also seen a pipe led from the engine room into the stoke-hold at an angle with a view to the same result.

Various forms of ventilating cowls were suggested—all, however, dependent more or less on a breeze of wind on deck in order to make them effective.

Digitized by Google

The loss of fresh water and the loss of steam through radiation

is a very important subject; the theory, however, which was sprung upon us by Mr. Sommerville, I am afraid we will find hard to appreciate. The covering of all pipes and every portion of the machinery as far as practicable with non-conducting material is most essential to economy in fuel, as well as the comfort of all whose work lies in the engine room and stoke-hold.

The difference between the loss of fresh water on this side of the Canal to that on the other side, was probably, to a large extent, due to the extra steam used for baths and saloon purposes. It is a wasteful plan to heat bath rooms by steam.

I have merely gone over several of the points suggested by the paper with the object of bringing them before the notice of the meeting to induce discussion, and shall be glad if members will make their remarks freely that the time may be fully utilised.

---

## MR. R. DUNCAN'S REMARKS.

My ideas differ from some others given as to the engine room sky-light not being used as a funnel for taking out the hot air. I believe it should be used for this purpose. In this paper it is stated that the ship was cooler with the engine room open at the sides than when boxed in; I take the cause of this to be that the air gets rarefied by the hot cylinders, and rushes up through the sky-light above, thus acting as an ejector. The air then flows in from the passages into the engine room, to supply the place of what has gone through the sky-light. I have also found that engine rooms with large sky-lights are cooler than those with small ones. The engine room of one vessel I sailed in out to the east was very confined, but had a very large sky-light. This ship was very much cooler than another in which I sailed in the same trade. The latter had a large engine room with plenty of area to move about in, but a very small sky-light. In this vessel I made another opening, 3 ft. square, right above the high pressure casing. This hole reduced the temperature 9 degrees. Both these engine rooms were of the boxed in type, with a close bulkhead between the engines and stoke-hold, and in both I had canvas shoots fastened to the bottom of the ventilators, carried down to within about 3 ft. from the floor.

As to the ventilation of ships with closed in Engine Rooms, I have seen a double casing put round the upper part of the boiler room, and carried to the full height of the casing, which was about 14 ft. above the main deck. The space between the casings was left open at the top, and holes cut through from the bottom of the space into the passages between decks. The air in the space, being

Digitized by Google

heated through the plate next the boiler room, ascends, thereby causing a good circulation. This plan has answered so well, that this part of the ship is about the coolest and most comfortable place in her.

---

## MR. GEORGE W. BUCKWELL'S REMARKS

(Read by Mr. R. Adam.)

The method of Ventilation adopted in the steamers with which I am connected is as follows:—For the efficient ventilation of the saloons and other parts of the vessels, the funnels are made double, the annular space between the funnel and the casing being divided on each side vertically, so that the forward part of the after funnel is used for ventilating the fronts of the smokebox and uptake, and the after part is connected by means of pipes to the exhaust foul air from the saloons. The strong up current caused by the heated air, acts with great force, and the foul air is conveyed through the bulkheads and over the boilers by nine inch wrought iron tubes in the older vessels, and by twelve inch tubes in the newer ones, connected with a square case at the bottom of the annular space round the funnels. Ventilators are placed to lead down into the after end of the saloon to the underside of the cabin floors into a wooden channel provided to lead the air into the saloons through brass gratings. A perforated cornice is fitted round the saloons, and a wooden air pipe made under the seats on the saloon floor; the floor and skin of ship forming two sides, the other two sides being formed of wood. Thus the foul air passes through the perforated cornice and down between the ceiling and skin of ship, continuing along the wooden pipe and saloon floor and rising up the bulkhead to the iron pipe, before mentioned as leading to funnel casing. This ensures perfect ventilation and keeps the sides of the ship dry and free from rust.

This method of ventilation overcomes the difficulty experienced of keeping the passenger accommodation cool when there is a warm Engine-room and Stoke-hold; in fact, the hotter the engine room the cooler the saloon *seems*, but, perhaps that may be really only because the Engine-room is so hot that the cool air of the Saloon *appears* cooler than it really is. But I must say that the forward end of the Ladies' Saloon, which adjoins the after engine-room bulkhead, gets pretty warm at times due to transmitted heat.

In cross Channel Steamers the heat is most felt with a beam wind, the handrails in the Engine-room getting too hot to be touched with the naked hand at times. A thermometer hung at one particular place (the hottest) on the Engine-room ladder has registered 148° for two hours at a stretch. It is needless to say that a rush is always made past that particular spot.

Digitized by Google

The closed stoke-hold system of forced draught has been said to ensure good ventilation in the stoke-holds, but I know of two paddle steamers where this is any thing but the case. There are two boilers forward of, and two abaft the Engines, the fans for supplying the air being at the after end of the top platform. In this particular arrangement the after boilers get all the draught, the temperature in that stoke-hold being pleasant to remain in, but the forward boilers are obliged to have the ventilators open at times, and even then the firemen at work are nearly baked, the engine-room also being cruelly warm.

---

## MR. J. R. RUTHVEN'S REMARKS.

(Read by the Chairman.)

I was very glad to hear such a practical paper brought before us, and as it is treated by Mr. Sommerville it must give good results all round. First in its human interest, the necessity of living and being able to work in engine and boiler rooms is of the first importance to the staff, the passengers, and the owners. We must treat owners as our friends and show them that while discussing scientific subjects we look to the practical effects on all sides. It is clearly shown in this paper that the benefits will not be confined to the Engineers' department alone.

I can assure Mr. Sommerville that in the designing of Engine Room arrangements great thought is generally given, but as everyone knows the cost has to be considered, it is just such papers as this and the discussions, which I hope will show to those having the ordering of ships that they study their own interests by making every provision for the comfort of the men on whom the safety of their ships depends.

One of the points in this paper is of great interest, and Mr. Sommerville deserves great credit for bringing it forward, the more so as he cannot explain it. That eight tons of water could disappear per day is an item that requires looking to. I hope other members will experiment on this point and give us their views at a future meeting. I would suggest that great care should be taken to ascertain the way it is lost, whether as water or as steam, and also where. There is a wide field for experiment and valuable information.

---

Chairman: My attention was called a day or two ago to an article in the "Lancet" as well as to the article in the "Engineer" which gave rise to it and inspired, I understand, by

Digitized by Google

the paper read before us on the 31st January. It may be of interest to members present to hear what views are expressed by the medical journal. I will, therefore, with your permissfon read the article.

## THE VENTILATION OF STEAMERS.

(*The Lancet*, Saturday, February 15th, 1890.)

Attention has been directed in the "Engineer" to the imperfect arrangements at present made for ventilating the fire rooms and engine rooms of ocean steamers. Not only is the temperature of these rooms excessively high, but frequently there is no free circulation of fresh air. This is often due to running dead before the wind, and the small supply of oxygen is often so marked that not only do the men become cyanosed, but the furnaces refuse to burn and the steamer has to be turned out of its course so as to secure a certain amount of head wind. Merely working in such a high temperature must be exhausting in the extreme; but when to this there is added an insufficient supply of fresh air for respiration and for cooling the skin by causing evaporation, the conditions become extremely prejudicial to health.

The remedy as pointed out by our contemporary is to have an arrangement of fans and arterial pipes to collect air from a pure source and to distribute it freely to the various rooms as may be required.

This has been done already on the *City of New York* and other large steamers, and it is to be hoped that the custom will soon become general. It is pointed out that the advantages and consequent improvements would soon repay the slight additional outlay, and we think the authorities might well insist on due provision being made for the efficient ventilation of the above-mentioned parts of ships before the usual certificate is granted.

## MR. J. H. THOMSON'S REMARKS.

When reports of insufficient ventilation have been made the usual thing has been to fit more ventilators and sometimes heighten the existing ones or put larger cowls on them, all with the object of getting more cold air down, but I think that if a little more attention was given as to how the heated air was to escape, better results could be obtained. I have observed that in vessels with a fore and aft stoke-hold, frequently one end becomes an upcast and with a change in the direction of the wind to the ship's course, a change sometimes takes place in the movement of the air, the end of the stoke-hold which formerly was the upcast becoming the

Digitized by Google

downcast; seeing this to be the case I think an improvement could be made in the existing ventilators by fitting dampers in them at the point where the hottest air is usually found and when they become upcasts the damper could be shut. This would require at the same time a space to be opened in the side of the ventilator above it, and thus allow the hottest air to escape and clear the space for the cold to come down.

Respecting the theory of the loss of water by radiation which Mr. Sommerville laid before us, if we grant that it does act as stated then I should say it will not be kept back by a covering of sheet felt or any thickness of non-conducting material; the loss will be found where there is an escape of vapour and not where there is radiation only.

---

## CAPTAIN FROUD'S REMARKS.

In my experience it has been easy to secure good, if not nearly perfect ventilation of Engine-room and Stoke-hold by attention to, and application of the laws which govern the circulation of fluids, aerial and otherwise.

Considering the spaces in question as one pit, I divide it unequally by a perpendicular brattice, extending from top of fiddley house to orlop beam, and from side bunker to side bunker. The columns of air in the two shafts are unequal in height—the smaller (stoke-hold) one extending to top of fiddley house—the larger (engine-room) stopping short of that height by some three feet, that being the bottom of large opening in sides of fiddley round engine-room, the difference, added to by the extra-heated, and consequently lighter air in stoke-hold shaft, sets going the circulation, which by the way is helped and directed to some extent by cool ventilators, one carried down after bulkhead of engine-room in a flattened shape to below bottom stroke of piston rod, and another one over starting platform (that being on a level with shaft), another over condenser. The result is a constant steady rush of air to the fires, and up the stoke-hold shaft as shown in accompanying rough sketch. Given these conditions it will be seen that if the 'tween decks bulkhead round engine-room is removed, a flow of air from surrounding cabins, passages and saloon must take place towards the fires and stoke-hold shaft. The foregoing remarks apply mainly to ships with one stoke-hold, and that without a ventilating cowl. Where there are two stoke-holds, the forward one is fitted in the usual way, after stoke-hold always remaining the uptake.

Where this system is applied, stagnant air of high temperature, loaded with effluvia or not, cannot keep its place on the floor of ar

engine-room or stoke-hold. Where a cross bunker intervenes between engine and boiler, the passage way should be made the most of; it is of great service, though not equal to the open arrangement previously described.

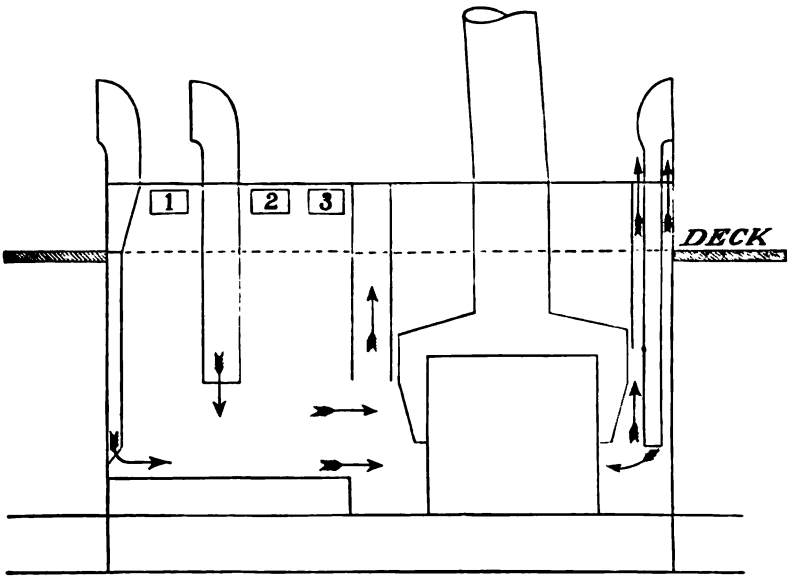


LOSS OF FUEL BY RADIATION.

Mr. Sommerville has too much reason to complain of the insufficient lagging of steam pipes, cylinders, &c., &c. Every pipe, including the flanges, all parts of the cylinders except the bottom, feed pipes, feed pumps, and, I think tail rods should be protected, these latter as the slide valve rods are; when a breeze at a low temperature is ranging over the cylinders, the loss of heat from the tail rods is great. Sheet iron enclosing non-conducting material, as described in the paper, or, as we venture to say, confined still air make excellent insulators.

I would help ventilation in ships' holds by communication with engine-room and stoke-hold, and by the annular casing around the funnel, its whole length.

I deferentially submit that it will be found difficult to fit exhausting engines to be effective in ventilating, but I should much like to see one in use.

Digitized by Google

## MR. W. WILSON'S REMARKS.

The idea of ventilation which has just been spoken of by Captain Froud, is, I think, the very thing that is wanted for engine rooms, for if it (the engine room) can be made the down cast and the stoke-hold the up cast, through the fires and fiddley gratings, then a very efficient system of ventilation is at once set up. I think that in the style of engine room shown in sketch No. 1 and which Mr. Sommerville recommends, that the real cause of the superiority of the ventilation is owing to the above principle. From personal experience I can say that in these engine rooms I found that no matter in what state the atmosphere was on deck there was always a cooling current in the passage between engine room and stoke-hold. I think Mr. Sommerville's method of coating all the exposed surfaces with a proper non-conducting material is the very foundation for such a system of ventilation, for the prevention of radiation in the engine room will certainly tend to induce a down draught through the skylights and other openings on top, and thus accomplish the desired object.

I think Mr. Sommerville deserves great credit for the way he has persevered in getting the engine room and stoke-hold so cool and comfortable as he has. I have it on the authority of some of those who have sailed in the ship before and after Mr. Sommerville commenced his system of covering that there were some places in the engine room where before the covering was put on, the heat was so oppressive that with difficulty they could stand for a few seconds; whereas, since covering, one can stand at the same places with comparative comfort.

With regard to the theory about water being lost through radiation, I must confess I cannot see it. That there is a great loss of water owing to uncovered surfaces of steam cylinders, pipes, &c., very few will deny, and that there must be a greater loss on the home side than there is on the Indian side of the canal is equally evident. In passenger ships—such as that in which Mr. Sommerville sails—this difference must be more marked, for there is a considerable loss caused by heating operations; thus, in baths, I think I can safely say that about 90 °/o of the passengers take hot baths on the home side as against 10 °/o on the Indian side. Again in these heating operations in baths, pantries, and galleys, more steam will naturally be required if in a semi-condensed state (such as would likely be obtained through uncovered pipes) than there will be were it in a dry state and of course of a higher temperature. Mr. Sommerville gives us some figures in support of his method of covering, and the saving of fresh water realised thereby.

Digitized by Google

These figures were, as you are aware, as follows:—Before coating further than that done when Mr. Sommervile joined the ship, the loss was six tons per day on Indian side and eight tons on the home side; after partial covering this was reduced to four tons and six tons respectively, and was again reduced by further covering, to two tons and four respectively. Now, when I examine these figures, I must say they appear a little strange to me and thoroughly against what I should have expected, for I find that at first with greatest loss, that on the home side exceeds by 33¾ o/o, that on the Indian side; when partially covered the difference is increased to 50 o/o and again on further covering it again increases to 100 o/o. Now I think that this should not be, I should have judged that the o/o should have decreased or at least remained stationary. I am sorry Mr. Sommerville is not here to give us his reasons for this, but, perhaps, he might be able to explain it some other time.

---

CHAIRMAN: We are pleased to see with us to-night one who has some authority to speak on the general subject of ventilation from the special study he has devoted to it, and we shall be glad if he will give us a few words on the subject. May I call on Mr. Hoey to speak?

---

## MR. D. G. HOEY'S REMARKS.

The subject opened up by the paper is too wide and comprehensive to make it possible to do justice to it in a few desultory observations in the course of a debate. The Institute and Marine Engineers generally are greatly indebted to the author of the paper, for calling attention in so clear and perspicuous a manner to a very great evil which urgently calls for a remedy. The paper points out with much force that the subject naturally divides itself into two distinct branches—(1) Insulation of the heat of boilers and all other mechanism and appliances in engine-rooms and stoke-holds, to prevent radiation; and (2) Effective introduction of fresh air in sufficient quantity and corresponding repulsion of the vitiated air.

The suggestion made by Mr. Thomson, and shewn in a rough drawing on the board, to continue the ducts (ventilators), or some of them, down to near the floor, and to have a let-off for the foul air at a high level, is in the right direction, and if the outlet tube were super-heated to promote rapidity of upward discharge, and insulated to prevent loss of the heat, that would work extremely well.

Digitized by Google

Captain Froud's observations are very valuable as shewing the great importance of a cushion of still air, as an agent in preventing radiation, and in approximating to insulation, but where the temperature is either abnormally high or abnormally low, something more is required to secure the desired result.

---

## MR. W. M. THOMAS' REMARKS.

As the subject of this Paper clearly denotes, it is in the tropical climates that the great necessity is felt for some efficient means of maintaining a cool engine-room and stoke-hold. It is then that all the present available means of ventilation and cooling fail, especially below, and at a time when it is most required, when we have a difficulty in keeping a head of steam to drive the ship at proper speed, because of lack of draught and increased temperature of the atmosphere, and when the energy of the engineers and firemen are taxed to their very utmost; for, unless we have wind, the large and ugly cowl-headed ventilators or wind catchers, which are fitted to the stoke-hold fiddleys fail, or are of no perceptible use but as uptakes, no matter what their construction is. And not only in the Tropics have we a scarcity of wind, but oftentimes when we have slight breezes the ship is travelling in the same direction, and at the same speed as the wind, thus causing a stagnation of atmosphere to those below. The great point to start with in overcoming this difficulty is, I believe, to be the drawing off of the hot and vitiated air, and that by the natural and proper channel—through the furnaces when, by natural laws, the cooler air must follow by every available means, whether it be by the engine-room doors and all openings to decks, by skylights, or ventilating pipes properly arranged for the purpose. Who, that has served in steamers with bunker between the engine-room and stoke-hold has not found that in the tunnel passage between them is the coolest place below? And is not this caused by the great volume of air drawn off by the fires? There is a system coming to the front which I believe will prove, in a great measure, to be the solution of this problem; a system which is now being taken up by the Admiralty for experiment (I refer to Martin's system of induced draught) which makes use of a fan or air propeller fitted in the base of the funnel, and driven by some small steam motor, and which greatly accelerates the draught and increases the efficiency of the boilers to an astonishing extent, and this without any injurious effects on the boilers, the air passing through by induction, which is the great secret of success in locomotive practice.

Might I suggest that it would be very interesting if we could hear more of this system, say from the inventor or patentee himself?

Digitized by Google

Digitized by Google

B

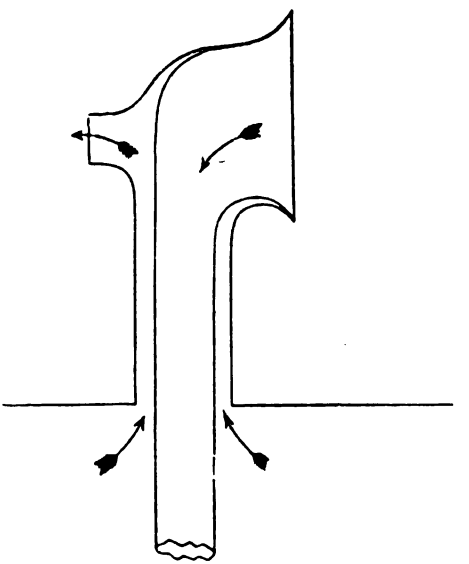

*Section of down and upcast Ventilator combined.*

Sketch illustrative of Mr. Roberts' Remarks. Page 18.

Digitized by Google

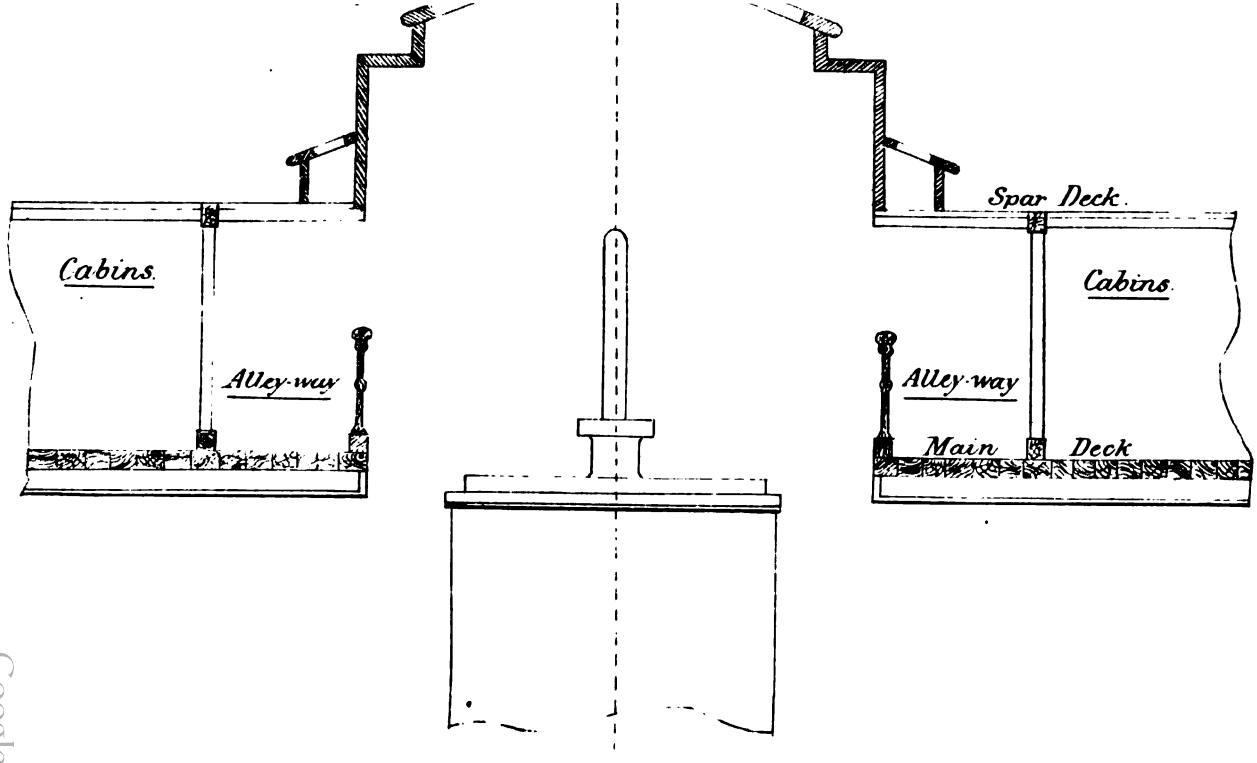


*Section through Engine Room*

Digitized by Google

D

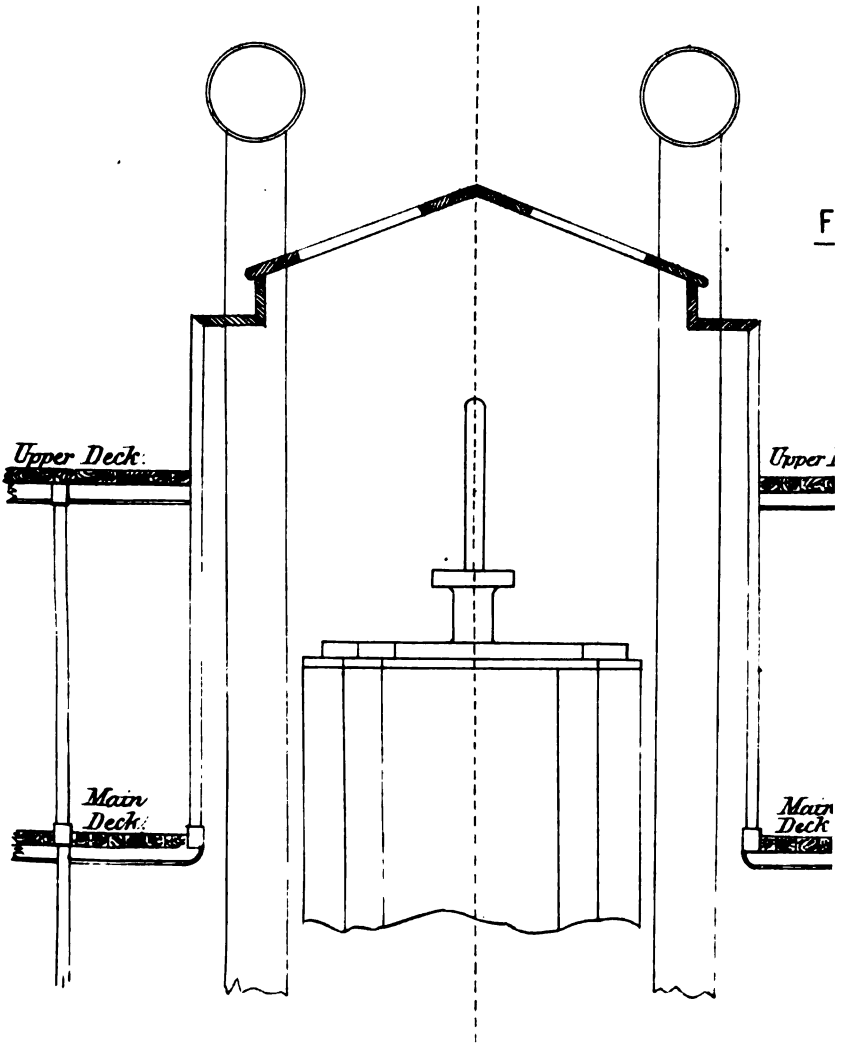


*Section through Engine Room*

Digitized by Google

Digitized by Google

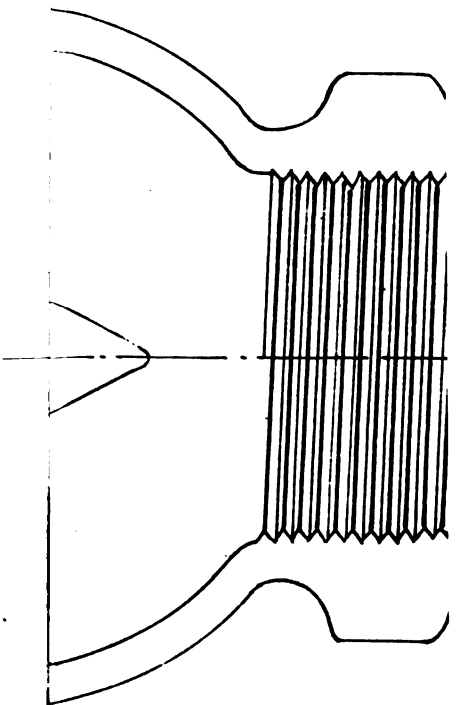

Digitized by Google

UNIV. OF MICH.

Digitized by Google

# INSTITUTE OF MARINE ENGINEERS.

SESSION, 1889-90.

Copy

# REPORT

OF THE PROCEEDINGS
AT THE

# ANNUAL GENERAL MEETING

HELD IN THE

## LANGTHORNE ROOMS,

15 & 17, BROADWAY, STRATFORD,

**On Saturday, 29th March, 1890.**

---

BALANCE SHEETS AND CATALOGUES ATTACHED.

---

JAS. ADAMSON,

*Honorary Secretary.*

STRATFORD:

Printed by Wilson and Whitworth, Broadway.

Published at the Langthorne Rooms, 15, Broadway, Stratford, Essex

Digitized by Google

Digitized by Google

STRATFORD, ESSEX,

*29th March*, 1890.

THE FIRST ANNUAL GENERAL MEETING of the INSTITUTE OF MARINE ENGINEERS was held this evening, when, in the unavoidable absence of Mr. ASPLAN BELDAM, President, the Chair was occupied by Mr. J. McF. GRAY, Vice-President.

Messages from Messrs. A. BELDAM, W. C. ROBERTS and J. W. DOMONEY were read, expressing regrets at unavoidable absences, and warm wishes for a pleasant and profitable meeting

The Chairman, after briefly commenting upon the work accomplished during the first year of the history of the Institute, called for the appointment of two Scrutineers, to examine the Voting Papers and declare the result, showing the Office Bearers and Council for 1890-91 elected by the votes of the members.

Mr. R. ADAM moved, and Mr. C. L. E. MELSOM seconded, the appointment of Messrs. J. W. RICHARDSON and C. NOBLE, who were duly elected.

The Chairman then called for the Report and Balance Sheets, which were read as follows:—

ANNUAL REPORT, 1889-90.

The duty of making and submitting an Annual Report is not always a pleasant one. It is, therefore, with considerable pleasure and satisfaction that I now place before you the FIRST ANNUAL REPORT of the INSTITUTE OF MARINE ENGINEERS, containing, as it does, a record of continued success in respect to its internal progress and external influence.

In giving a record of the twelvemonths' work, dating from the 1st February, 1889 till the 31st January, 1890, some reference should be made to the foundation work of the organising Committee; I will, therefore, give a brief account of that work, so that it may be placed on Record, in the Transactions of the Institute.

The question of having an Institute and Rooms, in which Marine Engineers could meet and discuss the various subjects bearing upon their work, has frequently been discussed during the past ten years; but no organised scheme had been prepared and brought forward to meet the requirements of the case. About the month of October, 1888, several conversations were held, these resulted in meetings being arranged for in November, 1888. The following is an extract from the Minute Book regarding these:—

"In connection with the proposal to found an Institute for

Digitized by Google

Marine Engineers, several informal preliminary meetings were held. The following gentlemen were present at most of the meetings, and used their personal interest towards furthering the objects aimed at :—

Messrs. J. Adamson, L. P. Coubro, D. Greer, J. G. Hawthorn, R. Leslie, H. Prior, M. Prior, F. W. Shorey, J. H. Thomson.

The following attended one or two of the provisional meetings, evidencing their sympathy with the movement :—

Messrs. J. Tait, C Noble, D. McMillan, F. J. White, W. W. Wilson, L. Ogden, J. M. Kent, D. McCaig.

In addition to these many others showed their concurrence by allowing their names to appear on the circular dated 20th November, 1888, which was submitted to, and approved by, the Committee, by whom, also, it was decided to get 2,000 copies printed and circulated. The following is a copy of the circular, with the names of the subscribers attached :—

Dear Sir, London, 20*th November*, 1888.

It has been considered highly desirable to form an Institute and Club for Marine Engineers, having for its objects the promotion of those intellectual and social qualities which render life more honourable and pleasant by their possession.

A few gentlemen interested in the subject have met and discussed the general idea of forming an Institute and Club specially for Marine Engineers, whether in Appointments afloat or ashore, with the result that a Provisional Committee has been formed to discuss details and take steps to discover how far the design would be met by Marine Engineers. The present circular letter is issued with a view to the latter intention.

Briefly, the Objects and Aims of the Institute, which it is proposed to name and register the "Institute of Marine Engineers" would be :—

1. The social elevation of the members generally.
2. The progressive advancement of the members in a knowledge of specialities and improvements in machinery as fitted, or proposed to be fitted, on board the steamers of the present or future.
3. The encouragement of original and improved methods of working, or arrangements of machinery to produce better results, by giving opportunities to members of reading papers, appointing times for discussions, and affording facilities for publishing what, in the opinion of members, is likely to prove beneficial and useful.

Digitized by Google

4. The maintaining and improving the status of the profession of Marine Engineers, by creating greater facilities for self-culture, by social intercourse, and the exercise of those faculties which tend to elevate and ennoble.

5. The providing of accommodation for members in respect to Reading and Recreation Rooms, founding and maintaining a Library for the use of members, and supplying on the most moderate terms possible, Board and Lodging, in part, or whole, for members, in a building or buildings convenient to the Docks.

The undersigned beg to bring before your notice the intentions and proposals of the Provisional Committee, and desire to have your views expressed on the annexed form (which please return in the enclosed envelope) if you will kindly consider the question and state how far you coincide with the proposals, and if you would support the Institute by joining its membership, and recommending others.

It is proposed to hold a Meeting—to which you, and your junior Engineers are cordially invited—on 12th February, 1889, in the Workman's Hall, West Ham Lane, Stratford, at 8 p.m., to consider the whole plan of forming and registering an Institute and Club specially for Marine Engineers.

*** It is further proposed to create a Fund for the purpose of obtaining and stocking suitable premises for the Institute, by giving each one of the first thousand Members a share in the undertaking, on payment of £1, in addition to the first Annual Subscription, each Shareholder being entitled to participate in any profits arising out of the Commercial or Trading Department, the limit to each Member being 20 Shares; and the Directorate to consist of Members of whom two-thirds shall be Shareholders, each to the extent of not less than 5 Shares.

*** In addition to the original Shareholders and Members, it is further proposed to elect and receive as Honorary Members any gentlemen who are interested in Marine Engineering, and who may desire to attend the Meetings of the Institute without sharing in its management; the Subscription for such Honorary Members being £5 5s.

*** The right of purchasing the whole of the Shares, at par, shall be reserved to the Institute at the option of the Membership, when the Funds admit, so that the profits and whole of the funds may be used for the Main Objects of the Institute.

Digitized by Google

The Chief Examiner, several of the Board of Trade Surveyors, and many Superintending Engineers, after reading the foregoing letter, have signified their cordial sympathy and approval.

We are,

DEAR SIR,

Yours faithfully,

| | | |
|---|---|---|
| * JAS. ADAMSON | D. HENDERSON | * F. W. SHOREY |
| A. ALLISON | GEO. INGLIS | A. SOMERVILLE |
| * A. BELDAM | * W. P. LAING | * J. STEWART |
| JOHN BRUCE | J. M. LEIGHTON | * J. TAIT |
| L. P. COUBRO | * R. LESLIE | W. M. TAYLOR |
| * W. J. CRAIG | * D. McMILLAN | ARCH. THOMSON |
| J. W. DERBY | A. McMURCHY | * J. H. THOMSON |
| T. W. FISH | * C. NOBLE | M. TURNBULL |
| A. J. GIBB | H. PRIOR | J. WARNER |
| * D. GREER | * M. PRIOR | J. WILKINSON |
| * J. G. HAWTHORN | T. RUSSEL | W. W. WILSON |

---

At a subsequent Meeting, as per Minute, it was decided to issue the circulars remaining on hand, with an additional note, calling special attention to the Meeting to be held on the 12th February, and at the same time mentioning the clauses relating to the Shares, &c., being altered or deleted, the following is a copy :—

THE LANGTHORNE ROOMS,

STRATFORD,

*January 29th*, 1889.

DEAR SIR,

I would remind you of the Meeting called for the 12th February, and would further ask you to invite all whom you consider eligible as Members, Associates or Graduates, to attend, so that the proposals of the Committee may be laid before a good Representative Gathering.

The Entrance Fees (£1) are now being received from those who have been proposed and Elected as Members, and arrangements have been made to open a Reading Room in the above premises on and after Friday, 1st February, from 5 to 10 p.m. for the accommodation of Members, which kindly note.

The Committee meets every Friday evening from 7.30 to 10 to discuss and consider the concerns of the Institute, and receive Proposals for Membership.

Digitized by Google

Hoping for your cordial co-operation and support, in the name of the Committee.

I am,

Yours faithfully,

JAMES ADAMSON,

*Hon. Secretary.*

---

* Organising Committee.

N.B.—The views shown in clauses marked *** in the original circular are being altered to suit Registration under the Board of Trade.

---

The Reading Room was opened in the Langthorne Rooms, 15 and 17, Broadway, Stratford, E., on the 1st February, in accordance with a resolution passed by the organising Committee. The table was supplied with papers and magazines by voluntary contributions, these have been supplemented from time to time both by voluntary contributions and the vote of the Council. Reference to the statement attached to this Report will show members what papers and magazines may be seen in the Reading Room, and whether contributed from voluntary subscribers, or the funds of the Institute.

The Property of the Institute, apart from the Library and Reading Table Literature, is also noted on a statement herewith submitted, and in addition to what is mentioned, there are many articles and objects of interest which want of accommodation prevents the receipt of.

The question of accommodation has been considered at several Council Meetings, and discussed by members both in Council and in private circle. It is being forced upon us to take steps to enlarge the area of our Habitation, and seek premises which we can call our own.

The numerical strength of the membership up to the 31st January, which terminated the first year of the Institute, was as follows :—

| | |
|---|---|
| Honorary Members .. .. .. | 15 |
| Members .. .. .. .. | 206 |
| Associate Members .. .. .. | 12 |
| Associates .. .. .. .. | 15 |
| Graduates .. .. .. .. | 5 |
| Total .. .. .. .. | 253 |

Digitized by Google

The membership up to this date stands as under:—

| | |
|---|---|
| Honorary Members .. .. .. | 17 |
| Members .. .. .. .. | 228 |
| Associate Members .. .. .. | 17 |
| Associates .. .. .. .. | 16 |
| Graduates .. .. .. .. | 5 |
| Total .. .. .. .. | 283 |

Referring to the membership list, it is a matter of very deep regret that we have to omit so many familiar names when issuing notices and papers. The hand of death has robbed us of not a few whose loss we mourn, as well for the value they added to the community, as their personal worth. To some of us the associations clustering around their names are fragrant with the balm of friendship, rooted in the depths underlying the elements of qualities which, combined, are summed up in the ideal of true manhood.

In the List of Members already printed, are recorded the names of Robert Saddler, George Cleghorn, Joseph Stewart, William Waddel, and William Stevenson. Since the List was printed and bound, along with the small copy of the Articles of Association, By-Laws, &c., two other members have been summoned from our midst. By the loss of the *Erin*, followed by that of the *Quetta*, John Simpson and Andrew McMurchy have ceased to respond to the "roll call" of our membership; both were well known and respected for their high sense of duty and personal qualities. We mourn and deeply sympathise with those they have left behind.

The attendance of Members at the Reading Room, which is open every evening from 5 till 10, has not been so encouraging as was anticipated. During the past month or two the average attendance has been more favourable, and it is hoped that both the Reading Room and Library will be used to a greater extent during the current year.

It is proposed to established a Circulating Library as soon as possible, and with a view to this, members and friends who are interested in the progress of the Institute are invited to contribute books of a suitable character.

During the Session, 11 papers have been read and discussed. These have been printed and are being published, with the exception of the second paper which was very kindly prepared (hurriedly) in order to meet an unexpected emergency and was not therefore intended for publication.

The list of papers in preparation it is satisfactory to note is a full one and embraces the following subjects:—The Marine Boiler,

Digitized by Google

Preservation of Boilers, Boilers (Land and Marine), Pistons, Ventilation, Copper Pipes, Valve Gear, &c., in addition to those which have already been announced, with the dates arranged, till and including the 13th May.

It is proposed that members, unable to attend, should send their remarks in writing beforehand, to be read at the meeting assembled to hear any paper in which they may be interested, or the subject matter of which they may be able to throw any light upon. Members who enter into the discussion on any paper should send their remarks in writing, as soon after the meeting as possible, to facilitate the work of publishing.

It has been proposed by several members, and it is recommended by the Council, that a small charge should be made for the papers which are published, this question will fall to be considered and resolved upon by the new Council.

It has also been proposed that at several ports, where the numerical strength warrants such an arrangement, meetings should be held simultaneously with the meetings in London, at which the same paper should be read and discussed. The discussions at these ports to be printed in the Published Transactions. Cardiff may be mentioned as one where the membership is almost strong enough already to carry out this proposal.

The Cash Statement, which is also submitted herewith, is eminently satisfactory, and shows a good balance, considering the heavy initial expenses in connection with the formation and registration (legal expenses) of the Institute. The amount of work accomplished for the money expended may be reckoned as a very high rate of interest.

In closing, it may be remarked that, along with the Balance Sheet of the Institute, the Lists of Books, of Journals and Magazines, and of other property belonging to the Institute, a Balance Sheet of the Malcolm Campbell Memorial and List of Books is also attached.

Any members or friends who desire to contribute to this Memorial, or lend any volumes to the Institute, are invited to do so under the cover of this Loan Collection.

The hearty thanks of the Institute are due to those members and friends who have contributed above measure to the Funds and the Library, their names are on record in the Cash Balance and Library Fund sheets, or on the Library Catalogues.

Digitized by Google

The Conversazione, which was held in the Town Hall, Stratford, on Friday, December 6th, 1889, was attended by about 300 ladies and gentlemen. A full report of the proceedings has already been published; it need only be referred to here as having been a most pleasant and successful meeting, socially and financially.

The following recommendations are submitted with a view to their adoption, as by resolution of the members assembled, so that they may be thus ratified and passed on to the new Council to carry into effect:—

1. The creation of another Office-Bearer to be added as an *ex-officio* Member to the Council, whose duties shall be to keep the Minute Book and a record of the transactions of the Council. It is recommended that Mr. J. R. Ruthven be appointed as Minute Secretary.

2. The addition of Honorary Vice-Presidents to the existing orders of membership. The object is to admit of the election of well-known gentlemen of position who are interested in Marine Engineering, and whose sympathies are in the direction of the progress and advancement of Marine Engineers in everything that tends to greater efficiency and economy in the working of steamships.

It is proposed to invite the special attention of several prominent steamship owners to the claims and growing influence of the Institute, with a view to securing their co-operation and help towards erecting or purchasing a building, which may be fitted with Class and Lecture Rooms, and other arrangements calculated to give our young engineers opportunities of improving their minds, and better fitting them for their increasing responsibilities.

3. The adoption of a seal with crest and motto for the Institute, similar to the design shown on the Souvenir of the Conversazione, which was printed from a design evolved from several submitted by Mr. W. J. Craig for the approval of the members.

JAS. ADAMSON,

*Honorary Secretary*

Digitized by Google

The report having been read and the Financial Statement and Balance Sheet submitted, Mr. G. WILTSHIRE moved the adoption of the Report and the recommendations of the Council, embodied in the Report, to the effect that—(1) Mr. J. R. RUTHVEN be appointed Minute Secretary, with a seat in the Council *ex-officio*; (2) Honorary Vice-Presidents be elected in accordance with the views of the Council; (3) A seal and motto be adopted for the Institute on the lines indicated in the Report. The motion was seconded by Mr. IVES, and on being put to the meeting, was carried unanimously.

The Scrutineers were then called upon to declare the result of the voting papers, which was reported to be as follows:—

*President* · Mr. G. W. MANUEL.

*Secretary:* Mr. JAS. ADAMSON.

*Treasurer:* Mr. R. LESLIE.

*Council:*

Mr. L. P. COUBRO
„ A. J. MAGINNIS
„ D. MCMILLAN
„ M. PRIOR
„ D. GREER
„ A. GIBB
„ J. G. HAWTHORN

Mr. F. W. SHOREY
„ J. STEWART
* „ R. ADAM
* „ R. BRUCE
* „ C. HUDSON.
* „ S. C. SAGE

*Minute Secretary:* Mr. J. R. RUTHVEN.

The above-named Members were declared to be duly elected, and called to meet together on Friday, 11th April, at 7.30 p.m., for the transaction of business and election of Members.

Mr. J. A. ROWE proposed a Vote of Thanks to the retiring President and Vice-Presidents, associating with the latter the name of Mr. MCFARLANE GRAY, who had manifested so warm an interest in the Institute, and had been at most, if not all, of the meetings, lending his knowledge and experience for the benefit of all. The motion was seconded by Mr. S. C. SAGE, and carried with acclamation.

Mr. GRAY briefly responded to the vote of thanks in a few appropriate words.

---

* New Members of Council.

Digitized by Google

Mr. J. D. CHURCHILL said he rose with much satisfaction to discharge a pleasant duty. The statement submitted to the meeting, showing the progress made by the Institute in twelve months, was such that the Office Bearers and Council were deserving of most hearty thanks for what they had done. The mental labour of planning and organising, as well as the physical labour and expense connected with such work was considerable, and when in addition to all this, he considered that the Institute had been brought so well into shape, and so many papers had been contributed and published, it would have been matter for congratulation even to find the finances with a balance on the wrong side; but with such a balance as £190, after what had been accomplished, it was so highly satisfactory in his estimation that it called for more than passing recognition. There was one of the Office Bearers who had been pre-eminent in all that concerned the foundation work and progress of the Institute, and for the services he had rendered he proposed that the Honorary Secretary should be elected a life member. In connection with the work of the past year, he considered that Mr. J. H. THOMSON was one whose name ought to be associated specially with the vote of thanks, as on him had devolved much of the duty of acting as Chairman of the Council.

Mr. W. W. WILSON seconded the vote of thanks and the resolution endorsing the views expressed by Mr. CHURCHILL. These, on being put to the meeting, were carried unanimously.

The CHAIRMAN then conveyed to the Honorary Secretary the Resolution of the Meeting, and ratified the same by the usual sign.

Mr. J. H. THOMSON, in reply, said that it was with great pleasure he rose to respond to the unanimous and cordial vote of thanks passed to the Office Bearers and Council, and was sure it must be personally gratifying to everyone included therein, to learn that the services they had rendered to the Institute had been so much appreciated.

Being the first year of what it was hoped would be a long and useful career, there had naturally been a number of heavy as well as delicate matters to deal with, and whilst trying to promote the best interests of the Institute, it was difficult at all times to fall in with the ideas of individual members in matters of detail, it was very pleasant to find by the vote thus taken, as a whole, the approval of what had been done by the Office Bearers and Council had been expressed so cordially.

It was very gratifying to receive the thanks and vote of

Digitized by Google

confidence, yet he felt certain that if every member exerted himself to bring in one or more new members, so that at the next Annual General Meeting the Honorary Secretary would be in a position to report that we had reached our first thousand on the roll of members, it would be the neatest compliment that could be paid to the Council.

Mr. Churchill had referred to the Honorary Secretary in particular, and without doubt every member of Council would grant that he was deserving of all the praise which could be bestowed for his untiring energy and perseverance from the foundation and commencement of the Institute, and if the speaker might be allowed to make use of a phrase which had become common at the Committee Meetings, viz.:—"This is a matter we may safely leave in the hands of the Secretary to deal with and reply to," he would conclude by again expressing thanks for the vote of confidence so heartily accorded, and leave space for the Honorary Secretary to make any further remarks.

The Honorary Secretary then said that he felt a very keen appreciation of the honour conferred upon him; it was a matter for congratulation that success had so far crowned the efforts of the promoters of the Institute. That such an Institute was wanted, nay necessary, was patent to everyone who gave the subject any thought. It had been urged by those who saw behind the scenes, that the superiority of Britain in engineering matters was being approached, and it became a question of National importance to see that the rising generation of engineers should be well trained, and have every opportunity of gaining useful information placed within reach.

He had always viewed with favour, and had adopted and practiced the motto, "Man's success in life is measured by the good he does," and in connection with the Institute and other associations he was interested in, he had held in view the motto in question, and he further considered that everyone who gave assistance towards furthering the objects aimed at by the Institute would not only get good himself, but would have the satisfaction of knowing that he was doing good. He considered that the work aimed to be accomplished by the promoters of the Institute was good. It was good for the individual and good for the community. By being helpful to young engineers in training them to think aright and to improve themselves by better fitting all who come within its influence, the Institute would be a means of good to the whole Nation.

He concluded by expressing his warm thanks for the way in

Digitized by Google

which his name had been mentioned, and for the honour conferred in electing him a life member of the Institute.

Mr. J. McFarlane Gray then spoke on the prospects and aims of the Institute, and said that if every member of the Institute could be made to realize that his prospects legitimately include the whole universe set in boundless space for eternity, the aim of everyone would be to extend his knowledge of the universe, and, as an engineer, to take an engineering interest in that order of things in which we find ourselves placed. The aim of the Institute ought to be to promote the acquisition of knowledge related to engineering and the allied sciences.

To some extent the utilitarian side of knowledge would commend itself to us, and he did not think that could be better expressed than in the language of Scripture—"If the iron be blunt, and one do not whet the edge, then must he put to more strength, but wisdom is profitable to direct." In this sense the Institute ought to become a place where the irons we work with can be sharpened, and where knowledge can be obtained which may develop into the wisdom that is "profitable to direct." The object of study is, with too many, that they may get on, that they may obtain promotion and more money. If the object of study were solely to acquire knowledge there would be fewer disappointments. The real object of all is enjoyment, and that is believed by too many to be obtainable only by possessing money, whether that be earned, or come into by inheritance. But "wisdom is as good as an inheritance, yea, more excellent is it for THEM THAT SEE THE SUN; for wisdom is a defence and money is a defence, but the excellency of knowledge lies in this, that wisdom giveth life unto him that hath it." Let it be the aim of every member of this Institute to be in the rank of THEM THAT SEE THE SUN. There is a sun of beaming light in everything in nature, they who look for it will see it, and, when it is seen, then is wisdom felt to be more excellent than an inheritance. Let us meet together then to whet our iron and to see the sun.

Mr. Gray read a long extract from a paper he had written many years ago upon the same subject. The preceding sentences will convey an idea of its purport.

The meeting then adjourned to the Reading Room where coffee was served up.

The proceedings were resumed at 9.15 when Mr. Manuel presided, and said that in looking back on the great amount of work done by the members during the past year, he

Digitized by Google

could most heartily congratulate the retiring President and Council on the success which has attended their efforts, and on the vitality shown by the Institute having attained to its present position and influence, also character, which augured well for its future success. He sometimes thought too much had been done, but as there seemed to be no want of "go" with the engineers he must not be too critical. He desired to impress upon all the necessity of thinking out the subjects brought before them in the various papers connected with marine engineering, quietly and completely, bit by bit, so that they should become masters of them, and the desirability of continuing the discussions for this end, so that our marine engineers should become intelligent engineers, and when put in charge of machinery now extending to £50,000 in value, they may obtain the highest results from the engines, and he trusted that the Institute would aid largely in fitting the members for a higher attention to duty, that its influence would be felt, and that the Shipowners would be led to appreciate the benefits accruing to the members, and *aid* its efforts by contributing toitssupport,so that their engineers, by increased intelligence, would render them able to compete successfully with *other nations.*

Mr. Manuel pointed out that as the pressure of steam used in the Marine Engine increased, the economy due to equal additions of pressure decreased, and that the duty of the sea-going engineers should be to watch more closely the working of their machinery, in order to increase its efficiency; of the boilers, to solve the question of supplying the requisite quantity of air by forced draught; and of the auxiliary engines and machines, for refrgierating, electric lighting, hydraulics, &c., in order to improve upon them.

It is desirable before even entering on their duties as junior engineers, that a higher knowledge than is at present generally possessed should be obtained, as he found many young men even deficient of mechanical drawing, a knowledge of which is absolutely necessary and easily acquired, and he hoped that this Institute would be one of the means to obtain this knowledge, and that many would avail themselves of the opportunity.

Mr. Manuel said he need hardly point out that not only each member of this Institute would gain intelligence, but would acquire in their training here, the art of speaking before their fellows, and that forbearance and courtesy which would enable them better to fulfil important positions in life, whereby they would add to the advancement, comfort, and happiness of their fellow men, as well as their own.

In order to illustrate the advance in marine engineering, he

Digitized by Google

gave a comparison of the P. & O. fleet of steamers from the year 1837 to 1887, showing the progress made in 50 years and which is chiefly due to the improvements in the machinery along with the form of vessel better adapted for easy propulsion :—

| | Year. | Ship's Name. | Gross Tonnage. | I.H.P. | Speed, Knots. | Coal consumption, tons per day. | lbs. of steam pressure per square inch. | Description of Engines. |
|---|---|---|---|---|---|---|---|---|
| | 1837 | "Iberia" ... | 516 | 400 | 8 | 21 | 7 | Paddle |
| Years later. 15 | 1852 | "Indus" ... | 1950 | 1367 | 10 to 11 | 58 | 12 | Paddle Oscillating |
| 15 | 1867 | "Hindostan" | 3113 | 3000 | 12 | 80 | 30 | Screw Horizontal |
| 15 | 1882 | "Ballaarat" | 4752 | 2988 | 13 | 61 | 90 | Compound Inverted |
| 5 | 1887 | "Oceana" ... | 6187 | 4972 | 15·7 | 85 | 150 | Triple Expansion |

Comparison between "Iberia" and "Oceana," that is, ships built in 1837 and 1887—50 years :—

| | Year. | Ship's name. | Gross Tonnage. | I.H.P. | Speed in Knots. | Coal Consumption Tons per day. | lbs. of Steam Pressure per square inch. | Description. | Displacement. |
|---|---|---|---|---|---|---|---|---|---|
| | | | | | | | | | Tons. |
| 50 years | 1837 | "Iberia" | 516 | 400 | 8 | 21 | 7 | Paddle | 650 |
| | 1887 | "Oceana" | 6600 | 4972 | 15·7 | 85 | 150 | Triple Screw | 9060 |
| These figures show an increase in number of times, viz.:— ... ... | | | times nearly 13 | times 12½ | times nearly 2 | times only 2½ | times over 20 | | |

In the "Iberia" one ton of coal propelled 19 tons displacement, 168 knots per day.

In the "Oceana" one ton of coal propelled 106 tons displacement, 376 knots per day.

"Iberia," length and beam, 155-ft. × 24-ft. × 15-ft. 9-in. depth.

"Oceana," length and beam, 466-ft. × 52-ft. × 37-ft. depth.

Digitized by Google

Mr. MANUEL concluded by saying that it would be seen from the figures the speed and size of vessels had been gradually increasing and that the last move had been a very considerable one, and it would be a question more for the Shipowner than for the Engineer to decide how far the increase should be carried. That high speeds are not obtained without a large increase of fuel, is a fact not often considered by the travelling public. In the year 1830, steamers were built about six times as long as they were broad, this proportion of length to beam gradually increased to ten to one in 1874, after which the ratio slowly decreased to between 8¼ and 9 to 1, the present proportion.

The appointment of Auditors for the current year was then moved by Mr. R. BRUCE, who proposed that Mr. J. A. ROWE and Mr G.W. KIDD should be appointed. Mr.W.WHITE seconded, and on being put to the meeting these gentlemen were declared to be duly elected.

Mr. H. E. LESTER (Honorary Member), then gave an address on the subject of a building for the Institute, pointing out the great advantages which would result from having premises of a special character to suit the requirements of all grades of engineers. Although not an engineer himself, he had a good deal to do with engineers, with whom also he had many sympathies in common; he would be pleased to aid in the work of building up the Institute so far as he could render any assistance. Mr. LESTER, proposed that a meeting should be convened to which gentlemen of position and means in the shipping world should be invited, that the objects and aims of the promoters of the Institute might be laid before them; also the claims that such had upon their sympathy and support. To this end he offered a donation of £10 to assist in defraying any expenses in connection with a meeting, and a further donation of £10 towards starting the neuclus of a building fund.

Mr. LESLIE said that Mr. LESTER had left little for him to say, but he might add as to building materials, that of one kind there was at present a fair stock, and if young men would only take to heart the good sound advice given by Mr. MCFARLANE GRAY, they could build themselves up in wisdom and knowledge, and by so doing they would be fitted to fill any position of trust, such positions as were largely on the increase so far as Marine Engineering was concerned. As remarked, the Institute's Reading-Room contained a fair stock of building materials for this purpose, but he thought all members present (and a good many who were absent) had come to the conclusion that the

Digitized by Google

building materials now required were such as could be seen rising up with a good substantial building, where young men could spend their evenings, studying the profession on which depended the future prosperity of the country and the power of the nation, and he earnestly hoped that leading men and steam ship owners would see their way clear to encourage and assist the movements of the Institute as far as they possibly could, and with their universal and hearty support. He felt sure that the Institute—which was now fairly established—would in future be the means of doing much good. As foreign countries were going ahead, building their own steamers and engines, and competition getting keener every day, he held that if Britain wished to hold the high position which it had held in the past, vigorous action should be taken to maintain our Mercantile Marine as the finest in the world, and to this end everyone should do their best to keep it so. He had heard with much pleasure that LORD RAVENSWORTH, at a meeting of the Naval Architects on Friday evening, made mention of the good, useful work being done in the East End of London by the young Institute of Marine Engineers, and earnestly hoped that the two Institutions might unitedly be the means of furthering Britain's future power and glory. In conclusion, he thought that if every member would only throw as much earnestness and energy into the working of the Institute as the Honorary Secretary, no one would have any doubts as to the future results.

Mr. J. McF. GRAY considered that there should be two class rooms—one for chemistry and one for electricity, in charge of young men from the Royal College of Science, South Kensington, competent to instruct engineers in these subjects. He pointed out that other nations were becoming more and more alive to the importance of training engineers both in the scientific and mechanical departments of their business; so much so, that their education and training were made questions for the Governments to consider and legislate for. Such being the case, it behoved everyone interested in the progress and supremacy of our National shipping, to give his attention to efforts being made to improve our engineers, and he impressed upon the meeting that in order to retain our National supremacy in the merchant navy, very great efforts would require to be made, when other nations were doing their utmost to train up their young engineers at considerable cost, with a view to bring them forward well equipped for taking positions requiring technical and scientific knowledge, coupled with practical experience.

Mr. L. P. COUBRO' urged that in order to carry out the views of the Council it had become manifest that premises of a more extensive character would be required. He considered that not only

Digitized by Google

should there be Reading Room and Library and Meetings for Educational purposes but Recreation Rooms and attractions of a suitable character for the younger members.

He pointed out that young engineers came to London from all parts of the country and while in port most of them had no friend's house to resort to during their spare hours to relieve their sense of loneliness, and were thus easily led away to waste both time and money in places where bad habits were contracted and associations formed which were not of a character to improve them either mentally or morally. To counteract these conditions and present pleasant and social attractions to secure the sympathies of the junior engineers, he considered that it was necessary to have more accommodation and premises which would be more in their own hands so that members would feel more at home. The proposition made by Mr. Lester had his support and he would be pleased, although not by any means rich, to give £10 towards a Building Fund if other four would do likewise and make a small nucleus of £50 as a commencement.

Messrs. J. McFarlane Gray and others spoke in connection with this subject and Messrs. J. D. Churchill, Alderman Kidd, and Mr. H. W. White offered to supplement the donation of Mr. Coubro by £10, £10 10s., and £5 respectively *

The proceedings closed with a few remarks from the President in the course of which he offered to meet the proposal made by Mr. Lester by giving a similar amount.

Mr. J. D. Churchill proposed that a Special Committee should be appointed to make the necessary arrangements for such a meeting as had been indicated, *after* going fully into the whole question, so that a definite plan of operations might be resolved upon *in the first place.*

A vote of thanks to the Chairman was then moved by Mr. J. H. Thomson, and seconded by Mr. J. R. Ruthven, and carried unanimously, when the meeting terminated.

---

* Since the Meeting Mr. A. W. Robertson has offered to contribute £10 towards the arrangements of the proposed Meeting and £10 towards the Building Fund.

Digitized by Google

# INSTITUTE OF

## ANNUAL BALANCE SHEET,

### Receipts.

[illegible]. —

| | £ | s. | d. | £ | s. | d. |
|---|---|---|---|---|---|---|
| [illegible] .. .. .. .. | 186 | 0 | 0 | | | |
| [illegible] .. .. .. .. | 12 | 0 | 0 | | | |
| [illegible] .. .. .. .. | 9 | 15 | 0 | | | |
| [illegible] . .. .. .. | 2 | 10 | 0 | | | |
| | | | | 210 | 5 | 0 |
| [illegible] — | | | | | | |
| [illegible] . .. .. .. | 17 | 3 | 0 | | | |
| [illegible] .. . .. .. | 8 | 5 | 0 | | | |
| [illegible] .. . .. .. | 5 | 0 | 0 | | | |
| [illegible] ... .. .. .. | 1 | 0 | 0 | | | |
| | | | | 191 | 8 | 0 |
| . [illegible] .. .. | | | | 32 | 3 | 0 |
| . Ditto, [illegible] account, per Mr. V. [illegible] .. | | | | 3 | 7 | 6 |
| . Ditto, [illegible] .. | | | | 11 | 10 | 0 |
| . [illegible] .. .. | | | | 0 | 13 | 0 |
| . [illegible] .. .. | | | | 0 | 5 | 6 |
| . [illegible] .. | | | | 36 | 5 | 0 |
| . [illegible] 1890-91 .. | | | | 13 | 13 | 0 |
| | | | | £499 | 10 | 0 |

[illegible] this day examined the foregoing Accounts and com

, 1890.

Digitized by Google

# MARINE ENGINEERS

**YEAR ENDING 31st JANUARY, 1890.**

## Expenditure.

| | | £ | s. | d. | £ | s. | d. |
|---|---|---|---|---|---|---|---|
| By Expenses— | General Account .. .. | 128 | 7 | 9 | | | |
| „ do. | Papers and Discussions .. | 45 | 10 | 11 | | | |
| „ do. | Library and Reading Room .. | 8 | 17 | 10 | | | |
| „ do. | By-Laws Account and Legal Expenses (Incorporation) .. | 93 | 5 | 0 | | | |
| „ do. | Recreation Account including expenses in *re* Conversazione .. | 26 | 17 | 2 | | | |
| | | | | | 302 | 18 | 8 |
| „ Balance in Bank .. .. .. | | | | | 196 | 11 | 4 |
| | | | | | £499 | 10 | 0 |

pared them with the Vouchers, and find the same to be correct.

JOHN R. RUTHVEN,
WM. W. WILSON, } *Auditors.*

JAS. ADAMSON,
*Hon. Sec.*

J. W. DOMONEY,
*Hon. Treasurer.*

Digitized by Google

# THE MALCOLM

## BALANCE

### Receipts.

| | £ | s. | d. | £ | s. | d. |
|---|---|---|---|---|---|---|
| 'o Subscriptions received :— | | | | | | |
| Per Mr. A. Lawrie .. .. .. | 3 | 10 | 0 | | | |
| „ A. Colquhoun .. .. | 3 | 0 | 0 | | | |
| „ J. Girvin .. .. .. | 3 | 0 | 0 | | | |
| „ J. Tait .. .. .. | 3 | 0 | 0 | | | |
| „ A. McMurchy .. .. | 2 | 17 | 6 | | | |
| „ M. Turnbull .. .. | 2 | 12 | 6 | | | |
| „ J. Hall .. .. .. | 2 | 10 | 0 | | | |
| „ J. Taylor .. .. .. | 2 | 10 | 0 | | | |
| „ J. Milne .. .. .. | 2 | 10 | 0 | | | |
| „ J. Stewart .. .. .. | 2 | 3 | 0 | | | |
| „ R. Beldam .. .. .. | 2 | 2 | 0 | | | |
| „ A. Beldam .. .. .. | 2 | 2 | 0 | | | |
| „ A. Allison .. .. .. | 2 | 0 | 0 | | | |
| „ J. Whyte .. .. .. | 2 | 0 | 0 | | | |
| „ W. Stevenson .. .. | 2 | 0 | 0 | | | |
| „ R. Adam .. .. .. | 1 | 15 | 0 | | | |
| „ C. Currie .. .. .. | 1 | 5 | 0 | | | |
| „ J. Cowan .. .. .. | 1 | 0 | 0 | | | |
| „ Sums under £1 .. .. .. | 1 | 18 | 0 | | | |
| | | | | 43 | 15 | |
| „ Balance due to Treasurer .. .. | | | | 0 | 9 | 10 |
| | | | | £44 | 4 | 10 |

We have this day examined the foregoing Accounts, and

TRATFORD, 22*nd March*, 1890.

* Since the above Balance Sheet was made up, a Donation

Digitized by Google

# CAMPBELL MEMORIAL.

## SHEET.

### Expenditure.

| | £ | s. | d. | £ | s. | d. |
|---|---|---|---|---|---|---|
| By Pritchards' A/c. for Bookcase .. .. | 16 | 10 | 0 | | | |
| „ Books (as per Catalogue) .. .. | 26 | 18 | 5 | | | |
| „ Printing .. .. .. .. | 0 | 7 | 0 | | | |
| „ Catalogue Book .. .. .. | 0 | 3 | 0 | | | |
| „ Postages .. .. .. .. | 0 | 6 | 5 | | | |
| | | | | 44 | 4 | 10 |
| | | | | £44 | 4 | 10 |

compared them with the vouchers, and find the same correct.

JOHN R. RUTHVEN } *Auditors*
WM. WHITE }

JAS. ADAMSON,
*Hon. Treas.*

of £5 5s. has been received from Mrs. Campbell.
J. A

Digitized by Google

# MALCOLM CAMPBELL MEMORIAL.

## LIBRARY CATALOGUE.

## LOAN COLLECTION.

| No. | Description. | Lent by |
|---|---|---|
| 1 | Boilers (deterioration of) .. .. | Jas. Adamson |
| 2 | do. do. Report .. .. | do. |
| 3 | Marine Engines, Modern American | J. H. Thomson |
| 4 | Marine Architecture (Charnocks), vol. 1 | J. Adamson |
| 5 | do. do. vol. 2 | do. |
| 6 | do. do. vol. 3 | do. |
| 7 | Shipbuilding (A. F. B. Craize) .. | do. |
| 8 | Naval Architecture (D Steel) .. | do. |
| 9 | Screw Propeller (J. Bourne, C.E.) .. | J. H. Thomson |
| 10 | Mercantile Navy List .. .. | Jas. Adamson |
| 11 | Society of Engineers, Transactions 1876 | do. |
| 12 | do. do. 1879 | do. |
| 13 | do. do. 1880 | do. |
| 14 | do. do. 1881 | do. |
| 15 | do. do. 1882 | do. |
| 16 | do. do. 1883 | do. |
| 17 | Mechanics Magazine (Glasgow), vol. 2 | do. |
| 18 | do. do. vol. 3 | do. |
| 19 | do. do. vol. 4 | do. |
| 20 | do. do. vol. 5 | do. |
| 21 | Pattern Making (Foreman Pattern Maker) .. .. .. .. | Campbell Trustees |
| 22 | Civil Engineers (proceedings), vol. 87 | Jas. Adamson |
| 23 | Dictionary of Arts, &c. (Dr. Ure's), vol. 1 | J. H. Thomson |
| 24 | do. do. vol. 2 | do. |
| 25 | do. do. vol. 3 | do. |
| 26 | do. do. vol. 4 | do. |

Digitized by Google

CAMPBELL COLLECTION—*Continued.*

| No. | DESCRIPTION. | LENT BY |
|---|---|---|
| 27 | Microscopic Objects (Davies) .. .. | Jas. Adamson |
| 28 | Steam Engine (J. Bourne, C.E.) .. | do. |
| 29 | Engineering, vol. 1 } 1869 | do. |
| 30 | do. vol. 2 } 1869 | do. |
| 31 | Engineering, vol. 1 } 1870 .. | do. |
| 32 | do. vol. 2 } 1870 .. | do. |
| 33 | do. vol. 1 } 1871 .. | do. |
| 34 | do. vol. 2 } 1871 .. | do. |
| 35 | do. vol. 1 } 1872 .. | do. |
| 36 | do. vol. 2 } 1872 .. | do. |
| 37 | do. vol. 1 } 1873 .. | do. |
| 38 | do. vol. 2 } 1873 .. | do. |
| 39 | Dictionary of Engineering, vol. 1 .. | A. Beldam |
| 40 | do. do. vol. 2 .. | do. |
| 41 | do. do. vol. 3 | do. |
| 42 | Carpenter's Guide (Nicholson) .. | Jas. Adamson |
| 43 | Engineer, Surveyor, and Architect .. | do. |
| 44 | Steam Boilers (Peattie) .. .. | do. |
| 45 | Strength of Materials (T. Box) .. | Campbell Trustees |
| 46 | Physics (Ganots') .. .. .. | do. |
| 47 | Applied Mechanics (Rankine) .. | do. |
| 48 | Steam Engine do. .. | do. |
| 49 | Rules and Tables do. .. | do. |
| 50 | Lives of the Engineers, vol. 1 (Smiles) | do. |
| 51 | do. do. vol. 2 do. | do. |
| 52 | do. do. vol. 3 do. | do. |
| 53 | do. do. vol. 4 do. | do. |
| 54 | do do. vol. 5 do. | do. |
| 55 | Practical Engineer (Hutton) .. | do. |
| 56 | Works Manager do. .. | do. |
| 57 | Marine Steam Engine (Sennett) .. | do. |
| 58 | Marine Engineering (Seaton) .. | do. |
| 59 | Valve Gears (Zeuners) .. .. | do. |
| 60 | Hydraulic, Steam and Hand Power.. | do. |
| 61 | Modern Steam Practice (Winton) vol. 1 .. .. .. .. | do. |
| 62 | Modern Steam Practic (Winton) vol. 2 .. .. .. .. | do. |
| 63 | Shipbuilding (Rankine) .. .. | do. |

Digitized by Google

CAMPBELL COLLECTION—*Continued.*

| No. | DESCRIPTION. | | LENT BY |
|---|---|---|---|
| 64 | Engineers' Drawing (Le Blanc) .. | | Campbell Trustees |
| 65 | Nautical Magazine . .. | 1836 | Jas. Adar son |
| 66 | do. .. .. | 1837 | do. |
| 67 | do. .. .. | 1838 | do. |
| 68 | do. .. .. | 1839 | do. |
| 69 | do. .. .. | 1840 | do. |
| 70 | do. .. .. | 1841 | do. |
| 71 | do. .. .. | 1842 | do. |
| 72 | do. .. .. | 1843 | do. |
| 73 | do. .. .. | 1844 | do. |
| 74 | do. .. .. | 1845 | do. |
| 75 | do. .. .. | 1846 | do. |
| 76 | do. .. .. | 1847 | do. |
| 77 | do. .. .. | 1848 | do. |
| 78 | do. .. .. | 1849 | do. |
| 79 | do. .. .. | 1850 | do. |
| 80 | do. . .. | 1851 | do. |
| 81 | do. .. .. | 1852 | do. |
| 82 | do. .. .. | 1853 | do. |
| 83 | do. .. .. | 1854 | do. |
| 84 | do. .. .. | 1855 | do. |
| 85 | do. .. .. | 1856 | do. |
| 86 | do. .. .. | 1857 | do. |
| 87 | do. .. .. | 1858 | do. |
| 88 | do. .. .. | 1859 | do. |
| 89 | Boilers, Construction of (Traill) .. | | Campbell Trustees |
| 90 | Indicator (Richards) .. .. .. | | do. |
| 91 | Treatise on the Indicator (Graham) .. | | do. |
| 92 | Marine Propellers (Barnaby).. .. | | do. |
| 93 | Metals (Bloxam and Huntingdon) .. | | do. |
| 94 | Chemistry of Metals (Thorpe) .. | | do. |
| 95 | Chemistry Non-Metals (Thorpe) .. | | do. |
| 96 | Lectures on Electricity (Forbes) . | | do. |
| 97 | Practical Electric Lighting (Holmes) | | do. |
| 98 | Dynamo Electric Machinery (Thompson .. .. .. .. .. | | do. |
| 99 | Casting and Founding .. .. | | do. |
| 100 | Extra First Class Examination (Reed) | | do. |
| 101 | James Nasmyth (Smiles) .. .. | | do. |

Digitized by Google

CAMPBELL COLLECTION—*Continued.*

| No. | Description. | Lent by |
|---|---|---|
| 102 | Duty (Smiles) .. .. .. .. | Campbell Trustees |
| 103 | Thrift (Smiles) .. .. .. | do. |
| 104 | Scotch Naturalist (Smiles) .. .. | do. |
| 105 | Life and Labour (Smiles) .. .. | do. |
| 106 | Industrial Biography (Smiles) .. | do. |
| 107 | Self Help (Smiles) .. .. .. | do. |
| 108 | Invention and Industry (Smiles) .. | do. |
| 109 | Character (Smiles) .. .. .. | do. |
| 110 | Round the World (Smiles) .. .. | do. |
| 111 | George Moore (Smiles) .. .. | do. |
| 112 | Robert Dick, Geologist (Smiles) .. | do. |
| 113 | Human Physiology (Landvis and Stirling) .. .. .. .. | do. |
| 114 | Outlines of Geology (James Geikie) .. | do. |
| 115 | Geography (Physical) .. .. .. | do. |
| 116 | The Steamship, vol. 1 .. .. | do. |
| 117 | do. vol. 2 .. .. | do. |
| 118 | On the Human Understanding (Locke) | do. |
| 119 | Deterioration of Boilers, &c., vol. 1 .. | James Girvin |
| 120 | do. do. vol. 2 .. | do. |
| 121 | do. do. vol. 3 .. | do. |
| 122 | Merchant Shipping, History of, vol. 1 | Campbell Trustees |
| 123 | do. do., vol. 2 | do. |
| 124 | do. do., vol. 3 | do. |
| 125 | do. do., vol. 4 | do. |
| 126 | Engineering, vol. } 1874 .. .. | do. |
| 127 | do. vol. } | |
| 128 | do. vol. } 1875 .. .. | do. |
| 129 | do. vol. } | |
| 130 | Engineering, vol. } 1876 .. .. | Campbell Trustees |
| 131 | do. vol. } | |
| 132 | do. vol. 23 } 1877 .. .. | do. |
| 133 | do. vol. 24 } | |
| 134 | do. vol. 25 } 1878 .. .. | do. |
| 135 | do. vol. 26 } | |
| 136 | do. vol. 27 } 1879 .. .. | do. |
| 137 | do. vol. 28 } | |
| 138 | do. vol. 29 } 1880 .. .. | do. |
| 139 | do. vol. 30 } | |

Digitized by Google

CAMPBELL COLLECTION—*Continued.*

| No. | Description. | Lent by |
|---|---|---|
| 140 | Engineering, vol. 31 } 1881.. .. | Campbell Trustees |
| 141 | do. vol. 32 } | |
| 142 | do. vol. 33 } 1882.. .. | do. |
| 143 | do. vol. 34 } | |
| 144 | do. vol. 35 } 1883.. .. | do. |
| 145 | do. vol. 36 } | |
| 146 | do. vol. 37 } 1884.. .. | do. |
| 147 | do. vol. 38 } | |
| 148 | do. vol. 39 } 1885.. .. | do. |
| 149 | do. vol. } | |
| 150 | Inst. of Engineers and Shipbuilders in Scotland Transactions .. .. | Jas. Adamson |
| 151 | Steam and the Steam Engine (Evers) | do. |
| 152 | Thomson's Engineering Guide to Local Marine Board Examinations | do. |
| 153 | The Clyde from its Source to the Sea (W. J. Millar).. .. .. | Campbell Trustees |
| 154 | The Steam Engine (Holmes) .. | do. |

Digitized by Google

## THE PROPERTY OF THE INSTITUTE.

| No. | Description. | Presented by. |
|---|---|---|
| 1 | Coal Testing Machine .. .. | J. McF. Gray |
| 2 | Copying Machine .. .. .. | L. P. Coubro |
| 3 | Chest for papers, &c. .. .. .. | do. |
| 4 | Model—Morton's Radial Valve Gear | R. Bruce |
| 5 | Model—Dewrance's Patent Safety Water Gauge, also Drawing .. | Messrs. Dewrance |
| 6 | Book Case and Contents Lent by | Campbell Trustees |
| 7 | Blackboard .. .. .. .. | Purchased |
| 8 | Whittell's Patent Slide-Valve Indicator.. .. .. .. .. | W. W. Wilson |
| 9 | Ballot Box .. .. .. .. | Purchased |
| 10 | Two Occasional Tables .. .. | do. |
| 11 | One set of Chessmen and Board .. | do. |
| 12 | One set of Draught Men and Board.. | do. |
| 13 | Two Charts of Reynolds's Geological Diagrams (Coal) .. .. .. | do. |
| 14 | Certificate of Incorporation, in frame | do. |
| 15 | Two Photos. of Patent Improved Balanced Quadruple Expansion Engines .. .. .. .. | Fleming and Ferguson |
| 16 | Photo. of Steel Crank Shaft .. .. | Jas. Stewart |
| 17 | Photo. of Iron Crank Shaft .. .. | do. |
| 18 | Engraving of *Sea Horse* Lent by | Jas. Adamson |
| 19 | Model of Screw Propeller Lent by | G. W. Newall |
| 20 | do. Presented by | W. G. Winterburn |
| 21 | Model of Patent Lubricator .. .. | F. W. Shorey |
| 22 | Model of Piston Ring and Spring .. | M. Prior |
| 23 | Two Models of Pistons .. .. | Jas. Adamson |
| 24 | Post Office London Directory .. | Purchased |
| 25 | Specimens of Pins, result of wear .. | W. J. Craig. |
| 26 | Specimens of Scale .. .. .. | Jas. Adamson. |
| 27 | Drawings and Tracings (various) .. | do. |
| 28 | Book Case .. .. .. .. | A. Beldam. |
| 29 | Whitaker's Almanack .. .. | J. H. Thomson. |
| 30 | Stratford and District Directory .. | Jas. Adamson. |
| 31 | Letter Weigher .. .. .. | Purchased |
| 32 | Book Case .. .. .. .. | A. Beldam |
| 33 | Model of Propeller .. .. .. | H. Prior |

Digitized by Google

# INSTITUTE OF MARINE ENGINEERS.

## LIBRARY CATALOGUE.

| No. | Description. | Presented by |
|---|---|---|
| 1 | Useful Information for Engineers (Fairbairn) .. .. .. .. | J. McF. Gray |
| 2 | do. do. 2nd series | do. |
| 3 | do. do. 3rd series | do. |
| 4 | The Steam Engine (Bourne).. .. | do. |
| 5 | Voltaic Electricity (Tyndall).. .. | do. |
| 6 | Link and Valve Motions (Auchinclass) | do. |
| 7 | Once a Week, vol. 1.. .. .. | do. |
| 8 | do. vol. 2.. .. .. | do. |
| 9 | do. vol. 3.. .. .. | do. |
| 10 | do. vol. 4.. .. .. | do. |
| 11 | do. vol. 5.. .. .. | do. |
| 12 | do. vol. 6.. .. .. | do. |
| 13 | do. vol. 7.. .. .. | do. |
| 14 | do. vol. 8.. .. .. | do. |
| 15 | do. vol. 9.. .. .. | do. |
| 16 | do. vol. 10.. .. .. | do. |
| 17 | do. vol. 11.. .. .. | do. |
| 18 | do. vol. 12.. .. .. | do. |
| 19 | do. vol. 13.. .. .. | do. |
| 20 | Marine Engines and Boilers, vol. 1 .. | R. Leslie |
| 21 | do. do. vol. 2 .. | do. |
| 22 | Malit's Construction of Artillery .. | J. McF. Gray |
| 23 | Encyclopædia (Beeton's) vol. 1 .. | D. Greer |
| 24 | do. vol. 2 .. | do. |
| 25 | do. vol. 3 .. | do. |
| 26 | do. vol. 4 .. | do. |
| 27 | March of the Strikers (J. Bevan) .. | A. Campbell |
| 28 | Madame Midas (Fergus Hume) .. | do. |
| 29 | Taken from Life (Henry Pettitt) .. | do. |

Digitized by Google

LIBRARY CATALOGUE—*Continued.*

| No. | DESCRIPTION. | PRESENTED BY |
|---|---|---|
| 30 | The Crime of the Opera House .. | A. Campbell |
| 31 | Zeph (G. R. Sims) .. .. .. | do. |
| 32 | Without a Home (E. P. Roe) .. | do. |
| 33 | Coral Pin .. .. .. .. | do. |
| 34 | Zoroaster (F. M. Crawford) .. .. | do. |
| 35 | Souls and Cities .. .. .. | do. |
| 36 | Two Years Ago (Charles Kingsley) .. | do. |
| 37 | Notes on Lilies (Dr. Wallace) .. | do. |
| 38 | Crime and Punishment .. .. | do. |
| 39 | India Re-visited (Edwin Arnold) .. | R. Leslie |
| 40 | All the Year Round, vol. 1.. .. | J. McF. Gray |
| 41 | do. vol. 2.. .. | do. |
| 42 | do. vol. 3.. .. | do. |
| 43 | do. vol. 4.. .. | do. |
| 44 | do. vol. 5.. .. | do. |
| 45 | do. vol. 6.. .. | do. |
| 46 | do. vol. 7.. .. | do. |
| 47 | do. vol. 8.. .. | do. |
| 48 | do. vol. 9.. .. | do. |
| 49 | do. vol. 10.. .. | do. |
| 50 | do. vol. 11.. .. | do. |
| 51 | do. vol. 12.. .. | do. |
| 52 | do. vol. 13.. .. | do. |
| 53 | do. vol. 14.. .. | do. |
| 54 | do. vol. 15.. .. | do. |
| 55 | do. vol. 16.. .. | do. |
| 56 | do. vol. 17.. .. | do. |
| 57 | do. vol. 18.. .. | do. |
| 58 | Good Words, 1860 .. .. .. | do. |
| 59 | do. 1861 .. .. .. | do. |
| 60 | do. 1862 .. .. .. | do. |
| 61 | Electricity (John T. Sprague) .. | H. Chisholm |
| 62 | Elementary Engineering (J. Sherran Bower) .. .. .. .. | A. W. Robertson |
| 63 | Machine Drawing and Design (Ripper) | do. |
| 64 | Hydraulic Motors (G. R. Bodmer) .. | J. Lockie |
| 65 | Engineering Socially Considered (Haldane) .. .. .. .. | H. Hammett |
| 66 | Steam Boilers (R. D. Munro) .. | M. C. McKellar |

Digitized by Google

LIBRARY CATALOGUE—*Continued.*

| No. | DESCRIPTION. | PRESENTED BY |
|---|---|---|
| 67 | The Steam Engine (W. H. Northcott) | The Author. |
| 68 | Geometric Turning simplified do. .. | do. |
| 69 | On Lathes and Turning do. .. | do. |
| 70 | Into all the World (John Scarth) .. | The Author. |
| 71 | The Life of William Denny (A. B. Bruce) .. .. .. .. | P. M. Black |
| 72 | Webster's Dictionary.. .. .. | Purchased. |
| 73 | S.S. House Flags .. .. .. | do. |
| 74 | A Text Book on Steam and Steam Engines (Prof. Jamieson) .. .. | M. C. McKellar |
| 75 | The Engineer's Sketch Book (T. W. Barber) | do. |
| 76 | Mine Engineering (G. C. Greenwell) | A. McMurchy |
| 77 | Mine Engineering do. | do. |
| 78 | Haddon Hall .. .. .. .. | Capt. Angove |
| 79 | Only a Butterfly .. .. .. | do. |
| 80 | Deux Parisiennes .. .. .. | do. |
| 81 | Adventures of a Phæton (Wm. Black) | do. |
| 82 | Leyton Hall (Mark Lemon) .. .. | do. |
| 83 | Barren Honour .. .. .. | do. |
| 84 | Under which King (Wm. Johnston, M.P.) .. .. .. .. | do. |
| 85 | Against Wind and Tide (Holme Lee) | do. |
| 86 | Roba Di Roma (Wm. W. Story) .. | do. |
| 87 | Devereux (Lord Lytton) .. .. | do. |
| 88 | Fortunes of Nigel (Sir W. Scott) .. | do. |
| 89 | Tales of Three Cities (Henry James) | do. |
| 90 | Dumbleton Common (Hon. E. Eden) | do. |
| 91 | Hostages to Fortune (Braddon) .. | D. Gillespie |
| 92 | Frank Sinclair's Wife, vol. 2 (Mrs. Riddell) .. .. . .. | Capt. Angove |
| 93 | Mandolinette .. .. .. .. | do. |
| 94 | Prosper Randoce (Victor Cherbuliez) | do. |
| 95 | Mary Gresley (Anthony Trollope) .. | do. |
| 96 | Willing to Die (J. S. Le Fanu) .. | do. |
| 97 | In Pastures Green (Gibbon) .. .. | D. Gillespie |
| 98 | The Cure of Souls (Cobban) .. .. | do. |
| 99 | At Her Mercy (Jas. Payne) .. .. | do. |
| 99A | The Woman in Red (Hayward) .. | do. |

Digitized by Google

LIBRARY CATALOGUE—*Continued.*

| No. | DESCRIPTION. | PRESENTED BY |
|---|---|---|
| 100 | The Tropical Agriculturist, 1881-2 .. | Capt. Angove. |
| 101 | La Morte (Octave Feuillet) .. .. | do. |
| 102 | Ready-Money Mortiboy (W. Besant and J. Rice) .. .. .. | do. |
| 103 | Henrietta Temple (Earl of Beaconsfield) | do. |
| 104 | Cronow's Recollections .. .. | do. |
| 105 | Dick's Wandering (Julian Sturgis) .. | do. |
| 106 | London: its celebrated characters, &c. | do. |
| 107 | La San-Felice .. .. .. .. | do. |
| 108 | Two Duchesses (F. P. Clark) .. .. | do. |
| 109 | The Girls of Feversham (Florence Marryat) .. .. .. .. | do. |
| 110 | Joan (Rhoda Broughton) .. .. | do. |
| 111 | Laurence Sterne, vol. 2 (P. Fitzgerald) | do. |
| 112 | White Chief (Capt. Mayne Reid) .. | do. |
| 113 | Bella Donna (Gilbert Dyce) .. .. | do. |
| 114 | Les Drames de la Forêt (Alexis Bouvier) .. .. .. .. | do. |
| 115 | The Disowned (Lord Lytton) .. | do. |
| 116 | Blount Tempest (Rev. J. C. M. Bellew) | do. |
| 117 | Austin Elliot .. .. .. .. | do. |
| 118 | Condoned (Ann C. Steele) .. .. | do. |
| 119 | The Six Chief Lives—Poets (M. Arnold) | do. |
| 120 | L'Uscoque (Geo. Sand) .. .. | do. |
| 121 | The Gun, Ram and Torpedo (G. H. Noel) | do. |
| 122 | Ravenshoe (H. Kingsley) .. .. | do. |
| 123 | How he won Her (Mrs. Eiloart) .. | do. |
| 124 | The Contemporary Review (January-June, 1882) .. .. .. .. | do. |
| 125 | The Fortnightly Review (1882) .. | do. |
| 126 | Island Life (A. R. Wallace) .. .. | do. |
| 127 | Spon's Dictionary of Engineering, Div. 1 | At present unknown |
| 128 | do. do. Div. 2 | do. |
| 129 | do. do. Div. 3 | do. |
| 130 | do. do. Div. 4 | do. |
| 131 | do. do. Div. 5 | do. |
| 132 | do. do. Div. 6 | do. |
| 133 | do. do. Div. 7 | do. |
| 134 | do. do. Div. 8 | do. |

Digitized by Google

LIBRARY CATALOGUE—*Continued.*

| No. | Description. | Presented by |
|---|---|---|
| 135 | Burgh's Pocket Book on Compound Engines .. .. .. .. | J. H. Thomson |
| 136 | The Steam Engine, vol. 1 (D. K Clark) | A. W. Robertson |
| 137 | do. vol. 2 do. | do. |
| 138 | The Marine Engineer, vol. 1, 1879-80 | J. W. Richardson |
| 139 | do. vol. 2, 1880-81 | do. |
| 140 | do. vol. 3, 1881-82 | do. |
| 141 | do. vol. 4, 1882-83 | do. |
| 142 | do. vol. 5, 1883-84 | do. |
| 143 | do. vol. 6, 1884-85 | do. |
| 144 | do. vol. 7, 1885-86 | do. |
| 145 | do. vol. 8, 1886-87 | do. |
| 146 | do. vol. 9, 1887-88 | do. |
| 147 | do. vol. 10, 1888-89 | do. |
| 148 | Marine Engineering News, 1876 .. | do. |
| 149 | do. 1877 .. | do. |
| 150 | do. 1878 .. | do. |
| 151 | The Foreman Engineer, 1877 .. | do. |
| 152 | do. 1879 .. | do. |
| 153 | do. 1880 .. | do. |
| 154 | Handbook for Steam Users (M. P. Bale) | The Author |
| 155 | Marine Engines and Boilers (Geo. C. V. Holmes) .. .. .. | A. Lawrie |
| 156 | Theory of Heat (Maxwell) .. .. | J. H. Thomson |
| 157 | Conversion of Heat into Work (Anderson) .. .. .. .. | A. Lawrie |
| 158 | Heat a Mode of Motion (Tyndall) .. | do. |
| 159 | A Practical Treatise on Heat (Box) | do. |
| 160 | The Engineer's and Machinist's Drawing Book .. .. .. .. | H. Prior |
| 161 | Imperial Cyclopædia of Machinery .. | do. |
| 162 | Iron Ship Building (J. Grantham) .. | Jas. Adamson |
| 163 | Good Words, 1866 .. .. .. | J. McF. Gray |
| 164 | Shipbuilding—Plates— .. .. | Jas. Adamson |
| 165 | The Graphic, vol. 2, 1889 .. .. | Property of the Institute. |
| 166 | Illustrated London News, vol. 2, 1889 | |
| 167 | The Steam Engine (Clark) vol. 3 .. | A. W. Robertson |
| 168 | do. do. vol. 4 .. | do. |

Digitized by Google

LIBRARY CATALOGUE—*Continued.*

| No. | DESCRIPTION. | PRESENTED BY |
|---|---|---|
| 169 | Hydro-Statics & Pneumatics (Magnus) | J. Taylor |
| 170 | Elementary Mechanics (Magnus) .. | do. |
| 171 | Naval Architecture (Thearle), Text .. | do. |
| 172 | do. .. do. Plates | do. |
| 173 | Engineering, 1877 .. .. .. | Jas. Stewart |
| 174 | do. 1877 .. .. .. | do. |
| 175 | do. 1878 .. .. .. | do. |
| 176 | do. 1878 .. .. .. | do. |
| 177 | The Marine Transport of Petroleum (Little) .. .. .. .. | The Author |

Digitized by Google

# LIST OF MAGAZINES AND PAPERS.

## READING ROOM TABLE.

| No. | Description. | Presented by |
|---|---|---|
| | The Graphic, 1890 .. .. .. | Property of the Institute. |
| | Daily Graphic, 1890 .. .. .. | do. |
| | The Illustrated London News, 1890 .. | do. |
| | Marine Engineer, 1889-90 .. .. | do. |
| | Steamship, 1889-90 .. .. .. | do. |
| | Industries, 1889-90 .. .. .. | do. |
| | Shipping World, 1889-90 .. .. | do. |
| | Shipping World Year Book, 1890 .. | do. |
| | The Bailie, 1889-90 .. .. .. | do. |
| | Pen and Pencil, 1889-90 .. .. | do. |
| | Iron and Coal Trades Review, 1889 .. | The Editor |
| | Practical Engineer, 1889-90 .. .. | R. Leslie |
| | Mechanical World, 1889-90 .. .. | A. Daniels |
| | Engineer .. .. .. .. | L. P. Coubró |
| | Engineering .. .. .. .. | do. |
| | Iron .. .. .. .. .. | Various |
| | Fairplay .. .. .. .. | do. |
| | Newspapers .. .. .. .. | do. |
| | Transactions (Institute Engineers and Shipbuilders, Scotland) .. | Per favour of the Secretary |
| | Pamphlets and Papers (various) .. | Various |

# LIBRARY FUND.

## DONATIONS, 1889-90.

| | £ | s. | d. |
|---|---|---|---|
| A. Beldam .. .. .. .. | 10 | 0 | 0 |
| *A. Lawrie .. .. .. . | 1 | 18 | 0 |
| *M. C. McKellar .. .. .. | 1 | 8 | 0 |
| A. McMurchy .. .. .. .. | 0 | 10 | 0 |
| H. Hammet .. .. .. .. | 0 | 10 | 0 |
| J. Taylor .. .. .. .. | 0 | 10 | 0 |

* These Donations, having been received after January 31st, do not appear in the Balance Sheet.

Digitized by Google

# EXTRACT FROM BY-LAWS AS TO MEMBERSHIP.

## MEMBERS.

Candidates for admission as members must be Engineers, possessing First Class Board of Trade Certificates, and who have, in addition, occupied the position of Chief or Second Engineer, during a period of not less than twelve calendar months prior to the date of their application for Membership, or, in the alternative, they must be Engineers in virtue of their education and experience, who occupy, or have occupied, responsible positions on shore in the designing or construction of machinery in connection with Marine Engineering, or in the directing or carrying on of work connected with Marine Engineering.

ENTRANCE FEE, £1. ANNUAL SUBSCRIPTION, £1 1s.

## ASSOCIATE MEMBERS.

Candidates for admission as Associate Members must be Engineers, possessing Second Class Board of Trade Certificates, and who have, in addition, had charge of a watch at sea during a period of not less than eighteen calendar months prior to the date of their application for Membership, or, in the alternative, they must be Engineers in virtue of their education and experience, who occupy, or have occupied, some semi-responsible position on shore, in the designing or construction of machinery in connection with Marine Engineering, or in the directing or carrying on of work connected with Marine Engineering.

ENTRANCE FEE, £1. ANNUAL SUBSCRIPTION, 15s.

## ASSOCIATES.

Candidates for admission as Associates must ~~be gentlemen~~ not under the age of twenty-one years, who, by virtue of their education and experience, are Engineers, and who follow, or propose to follow, the occupation of Marine Engineers, or an occupation connected with Marine Engineering.

ENTRANCE FEE, 15s. ANNUAL SUBSCRIPTION, 10s.

## GRADUATES.

Candidates for admission as Graduates must be Apprentices to the science, profession, trade, or business of Engineering, who have served as such Apprentices during a period of not less than three years prior to their application for membership, and who propose to follow the occupation of Marine Engineers, or an occupation connected with Marine Engineering work.

ENTRANCE FEE, 10s. ANNUAL SUBSCRIPTION, 5s.

Any Graduate may be afterwards admitted as an Associate, Associate Member or Member (as the case may be), any Associate as an Associate Member or Member (as the case may be), and any Associate Member as a Member, at the discretion of the Council, on his becoming possessed of the necessary qualifications.

The Council shall have power to elect as Honorary Members, Peers, Members of Parliament, persons holding high civic or other distinguished positions, or influential persons connected with, or interested in, engineering, subject to such regulations as the Council shall from time to time decide. Such Candidates shall be entitled to be ballotted for immediately.

ANNUAL DONATION OPTIONAL.

Digitized by Google

*April 8th*, 1890.

At a Meeting of Council held subsequent to the Annual Meeting, Vice-Presidents, also the conveners of the various Committees were appointed as under:—

*President:*

MR. G. W. MANUEL.

*Honorary Secretary:*

MR. JAS. ADAMSON.

*Honorary Treasurer:*

MR. R. LESLIE.

*Past President:*

MR. ASPLAN BELDAM.

*Vice-Presidents:*

MR. C. A. CROOK
,, W. J. CRAIG
,, T. W. FISH
,, J. MC F. GRAY
,, G. W. KIDD
,, H. PRIOR
,, H. M. RAIT
MR. W. C. ROBERTS
,, A. W. ROBERTSON
,, JAS. STEWART
,, JOHN TAIT
,, J. H. THOMSON
,, JAS. WEIR
,, G. J. WILKINSON
MR. F. W. WYMER.

*Council:*

MR. R. ADAM
,, R. BRUCE
,, L. P. COUBRO
,, D. GREER
,, A. GIBB
,, J. G. HAWTHORN
MR. C. HUDSON
,, A. J. MAGINNIS
,, D. MCMILLAN
,, M. PRIOR
,, S. C. SAGE
,, F. W. SHOREY
MR. W. W. WILSON.

*Minute Secretary:*

MR. J. R. RUTHVEN.

*Conveners of Committees:*

MR. R. ADAM, *Library*
,, R. BRUCE, *Finance*
,, L. P. COUBRO, *Papers & Discussions*
,, J. G. HAWTHORN, *Cuttings & Press Notices.*
MR. J. D. CHURCHILL, *Premises*
,, S. C. SAGE, *Recreation*
,, F. W. SHOREY, *Reading Room*
,, J. H. THOMSON, *Property*
MR. W. W. WILSON, *Issue of Transactions.*

Digitized by Google

Digitized by Google